SECTION **GW**

GLASSES, WINDOW SYSTEM & MIRRORS

CONTENTS

PRECAUTIONS **3**
Precautions for Supplemental Restraint System (SRS) “AIR BAG” and “SEAT BELT PRE-TENSIONER” 3
Handling for Adhesive and Primer 3
PREPARATION **4**
Special Service Tools 4
Commercial Service Tools 4
SQUEAK AND RATTLE TROUBLE DIAGNOSES **5**
Work Flow 5
CUSTOMER INTERVIEW 5
DUPLICATE THE NOISE AND TEST DRIVE 6
CHECK RELATED SERVICE BULLETINS 6
LOCATE THE NOISE AND IDENTIFY THE ROOT CAUSE 6
REPAIR THE CAUSE 6
CONFIRM THE REPAIR 7
Generic Squeak and Rattle Troubleshooting 7
INSTRUMENT PANEL 7
CENTER CONSOLE 7
DOORS 7
TRUNK 8
SUNROOF/HEADLINING 8
SEATS 8
UNDERHOOD 8
Diagnostic Worksheet 9
WINDSHIELD GLASS AND MOLDING **11**
Removal and Installation 11
REMOVAL 11
INSTALLATION 12
SIDE WINDOW GLASS **13**
Removal and Installation 13
REMOVAL 13
INSTALLATION 13
REPAIRING WATER LEAKS 14
BACK DOOR WINDOW GLASS **15**
Removal and Installation 15
REMOVAL 15
INSTALLATION 16
REAR WINDOW DEFOGGER **17**
Component Parts and Harness Connector Location 17
System Description 17
Wiring Diagram — DEF — 19
Terminals and Reference Value for Smart Entrance Control Unit 21
Work Flow 21
Trouble Diagnoses 21
Check Rear Window Defogger Relay Power Supply 21
Check Smart Entrance Control Unit Power Supply and Ground 23
Check Rear Window Defogger Switch Circuit 24
Check Rear Window Defogger Circuit 26
Check Door Mirror Defogger Circuit 27
Check Rear Window Defogger Indicator Lamp Circuit 29
Filament Check 31
Filament Repair 31
REPAIR EQUIPMENT 31
REPAIRING PROCEDURE 32
POWER WINDOW SYSTEM **33**
Component Parts and Harness Connector Location 33
System Description 33
MANUAL OPERATION 34
AUTO OPERATION 37
POWER WINDOW LOCK 37
TIMER FUNCTION 37
DRIVER WINDOW ANTI–PINCH FUNCTION 37
Schematic 38
Wiring Diagram – WINDOW – 39
Terminal and Reference Value for Power Window Main Switch 43
Trouble Diagnoses Symptom Chart 44
Check Power Window Relay Power Supply and Ground Circuit 45
Check Power Window Main Switch Power Supply and Ground Circuit 46
Check Power Window Motor (Driver Side) Circuit 46
Check Power Window Motor Circuit 47
Check Power Window Switch Circuit 48
Check Power Window (Passenger Side) Circuit 49

Check Power Window (Rear LH) Circuit 49
Check Power Window (Rear RH) Circuit 50
Check Limit Switch Circuit 51
Check Encoder Circuit 52
Check Door Switch Circuit 54
FRONT DOOR GLASS AND REGULATOR 56
Removal and Installation 56
FRONT DOOR GLASS 56
FRONT DOOR REGULATOR ASSEMBLY 57
Fitting Inspection 58
REAR DOOR GLASS AND REGULATOR 59
Removal and Installation 59
REAR DOOR GLASS 59
REAR DOOR REGULATOR ASSEMBLY 61
Fitting Inspection 61
DOOR MIRROR 63
Wiring Diagram — MIRROR — 63
Removal and Installation 64
REMOVAL 64
INSTALLATION 64
Disassembly and Assembly 65
DISASSEMBLY 65
ASSEMBLY 66
INSIDE MIRROR 67
Removal and Installation 67
REMOVAL 67
INSTALLATION 67

PRECAUTIONS

PFP:00001

Precautions for Supplemental Restraint System (SRS) “AIR BAG” and “SEAT BELT PRE-TENSIONER”

AIS005Q1

The Supplemental Restraint System such as “AIR BAG” and “SEAT BELT PRE-TENSIONER”, used along with a front seat belt, helps to reduce the risk or severity of injury to the driver and front passenger for certain types of collision. Information necessary to service the system safely is included in the SRS and SB section of this Service Manual.

WARNING:

- **To avoid rendering the SRS inoperative, which could increase the risk of personal injury or death in the event of a collision which would result in air bag inflation, all maintenance must be performed by an authorized NISSAN/INFINITI dealer.**
- **Improper maintenance, including incorrect removal and installation of the SRS, can lead to personal injury caused by unintentional activation of the system. For removal of Spiral Cable and Air Bag Module, see the SRS section.**
- **Do not use electrical test equipment on any circuit related to the SRS unless instructed to in this Service Manual. SRS wiring harnesses can be identified by yellow and/or orange harnesses or harness connectors.**

Handling for Adhesive and Primer

AIS0061X

- Do not use an adhesive which is past its usable date. Shelf life of this product is limited to six months after the date of manufacture. Carefully adhere to the expiration or manufacture date printed on the box.
- Keep primers and adhesive in a cool, dry place. Ideally, they should be stored in a refrigerator.
- Open the seal of the primer and adhesive just before application. Discard the remainder.
- Before application, be sure to shake the primer container to stir the contents. If any floating material is found, do not use it.
- If any primer or adhesive contacts the skin, wipe it off with gasoline or equivalent and wash the skin with soap.
- When using primer and adhesive, always observe the precautions in the instruction manual.

PREPARATION

PFP:00002

Special Service Tools

AIS0061Z

The actual shapes of Kent-Moore tools may differ from those of special service tools illustrated here.

Tool number (Kent-Moore No.) Tool name		Description
(J-39570) Chassis ear	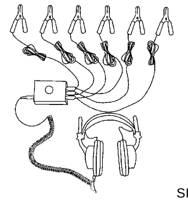 SIIA0993E	Locating the noise
(J-43980) NISSAN Squeak and Rattle Kit	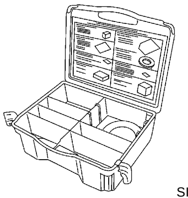 SIIA0994E	Repairing the cause of noise

Commercial Service Tools

AIS005Q3

Tool name		Description
Engine ear	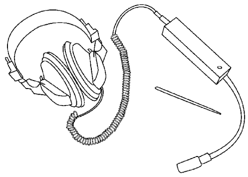 SIIA0995E	Locating the noise
Suction lifter	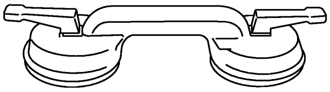 PIIB1805J	Remove the windshield, back door window glass Holding the door glass

SQUEAK AND RATTLE TROUBLE DIAGNOSES

PFP:00000

A B C D E F G H GW J K L M

Work Flow

AIS00611

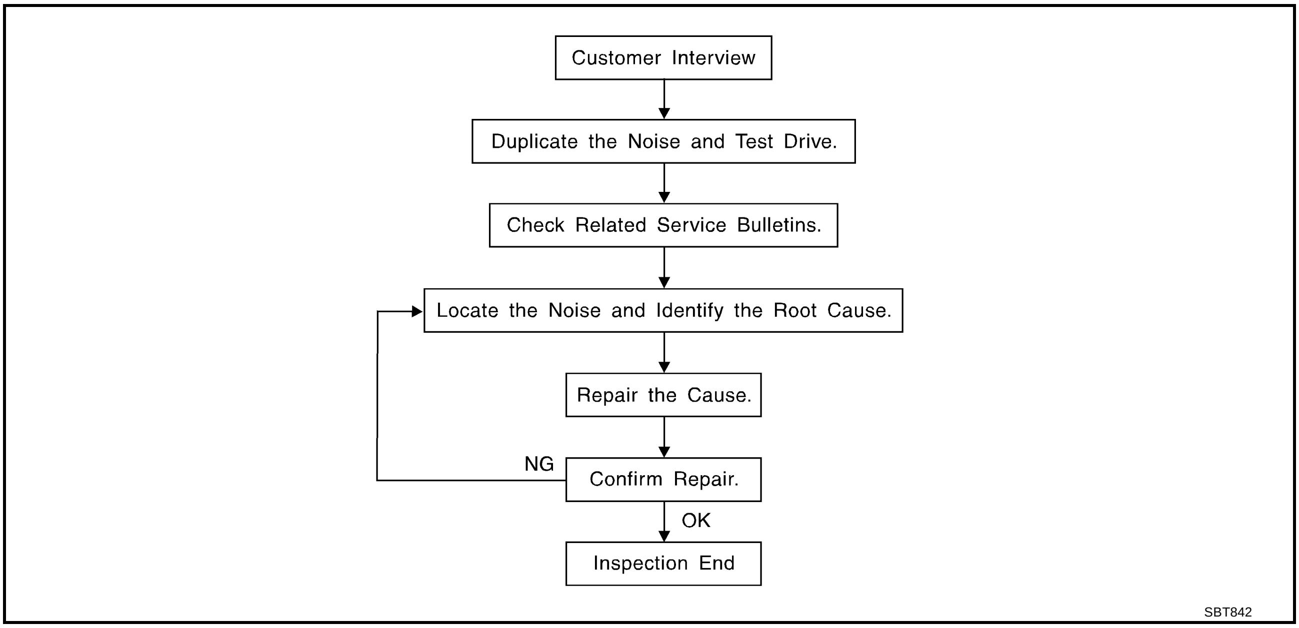

CUSTOMER INTERVIEW

Interview the customer if possible, to determine the conditions that exist when the noise occurs. Use the Diagnostic Worksheet during the interview to document the facts and conditions when the noise occurs and any customer's comments; refer to GW-9, "Diagnostic Worksheet" . This information is necessary to duplicate the conditions that exist when the noise occurs.

- The customer may not be able to provide a detailed description or the location of the noise. Attempt to obtain all the facts and conditions that exist when the noise occurs (or does not occur).
- If there is more than one noise in the vehicle, be sure to diagnose and repair the noise that the customer is concerned about. This can be accomplished by test driving the vehicle with the customer.
- After identifying the type of noise, isolate the noise in terms of its characteristics. The noise characteristics are provided so the customer, service adviser and technician are all speaking the same language when defining the noise.
- Squeak —(Like tennis shoes on a clean floor)
  Squeak characteristics include the light contact/fast movement/brought on by road conditions/hard surfaces=higher pitch noise/softer surfaces=lower pitch noises/edge to surface=chirping
- Creak—(Like walking on an old wooden floor)
  Creak characteristics include firm contact/slow movement/twisting with a rotational movement/pitch dependent on materials/often brought on by activity.
- Rattle—(Like shaking a baby rattle)
  Rattle characteristics include the fast repeated contact/vibration or similar movement/loose parts/missing clip or fastener/incorrect clearance.
- Knock —(Like a knock on a door)
  Knock characteristics include hollow sounding/sometimes repeating/often brought on by driver action.
- Tick—(Like a clock second hand)
  Tick characteristics include gentle contacting of light materials/loose components/can be caused by driver action or road conditions.
- Thump—(Heavy, muffled knock noise)
  Thump characteristics include softer knock/dead sound often brought on by activity.
- Buzz—(Like a bumble bee)
  Buzz characteristics include high frequency rattle/firm contact.
- Often the degree of acceptable noise level will vary depending upon the person. A noise that you may judge as acceptable may be very irritating to the customer.
- Weather conditions, especially humidity and temperature, may have a great effect on noise level.

DUPLICATE THE NOISE AND TEST DRIVE

If possible, drive the vehicle with the customer until the noise is duplicated. Note any additional information on the Diagnostic Worksheet regarding the conditions or location of the noise. This information can be used to duplicate the same conditions when you confirm the repair.
If the noise can be duplicated easily during the test drive, to help identify the source of the noise, try to duplicate the noise with the vehicle stopped by doing one or all of the following:
1) Close a door.
2) Tap or push/pull around the area where the noise appears to be coming from.
3) Rev the engine.
4) Use a floor jack to recreate vehicle “twist”.
5) At idle, apply engine load (electrical load, half-clutch on M/T models, drive position on A/T models).
6) Raise the vehicle on a hoist and hit a tire with a rubber hammer.

- Drive the vehicle and attempt to duplicate the conditions the customer states exist when the noise occurs.
- If it is difficult to duplicate the noise, drive the vehicle slowly on an undulating or rough road to stress the vehicle body.

CHECK RELATED SERVICE BULLETINS

After verifying the customer concern or symptom, check ASIST for Technical Service Bulletins (TSBs) related to that concern or symptom.
If a TSB relates to the symptom, follow the procedure to repair the noise.

LOCATE THE NOISE AND IDENTIFY THE ROOT CAUSE

1. Narrow down the noise to a general area. To help pinpoint the source of the noise, use a listening tool (Chassis Ear: J-39570, Engine Ear and mechanics stethoscope).
2. Narrow down the noise to a more specific area and identify the cause of the noise by:

- removing the components in the area that you suspect the noise is coming from.
  Do not use too much force when removing clips and fasteners, otherwise clips and fastener can be broken or lost during the repair, resulting in the creation of new noise.
- tapping or pushing/pulling the component that you suspect is causing the noise.
  Do not tap or push/pull the component with excessive force, otherwise the noise will be eliminated only temporarily.
- feeling for a vibration with your hand by touching the component(s) that you suspect is (are) causing the noise.
- placing a piece of paper between components that you suspect are causing the noise.
- looking for loose components and contact marks.
  Refer to GW-7, "Generic Squeak and Rattle Troubleshooting" .

REPAIR THE CAUSE

- If the cause is a loose component, tighten the component securely.
- If the cause is insufficient clearance between components:
  - separate components by repositioning or loosening and retightening the component, if possible.
  - insulate components with a suitable insulator such as urethane pads, foam blocks, felt cloth tape or urethane tape. A Nissan Squeak and Rattle Kit (J-43980) is available through your authorized Nissan Parts Department.

CAUTION:
Do not use excessive force as many components are constructed of plastic and may be damaged.

NOTE:
Always check with the Parts Department for the latest parts information.
The following materials are contained in the Nissan Squeak and Rattle Kit (J-43980). Each item can be ordered separately as needed.
URETHANE PADS [1.5 mm (0.059 in) thick]
Insulates connectors, harness, etc.
76268-9E005: 100 × 135 mm (3.94 × 5.31 in)/76884-71L01: 60 × 85 mm (2.36 × 3.35 in)/76884-71L02: 15 × 25 mm (0.59 × 0.98 in)
INSULATOR (Foam blocks)
Insulates components from contact. Can be used to fill space behind a panel.
73982-9E000: 45 mm (1.77 in) thick, 50 × 50 mm (1.97 × 1.97 in)/73982-50Y00: 10 mm (0.39 in) thick, 50 × 50 mm (1.97 × 1.97 in)

INSULATOR (Light foam block)
80845-71L00: 30 mm (1.18 in) thick, 30 × 50 mm (1.18 × 1.97 in)
FELT CLOTHTAPE
Used to insulate where movement does not occur. Ideal for instrument panel applications.
68370-4B000: 15 × 25 mm (0.59 × 0.98 in) pad/68239-13E00: 5 mm (0.20 in) wide tape roll
The following materials, not found in the kit, can also be used to repair squeaks and rattles.
UHMW (TEFLON) TAPE
Insulates where slight movement is present. Ideal for instrument panel applications.
SILICONE GREASE
Used in place of UHMW tape that will be visible or not fit. Will only last a few months.
SILICONE SPRAY
Use when grease cannot be applied.
DUCT TAPE
Use to eliminate movement.

CONFIRM THE REPAIR

Confirm that the cause of a noise is repaired by test driving the vehicle. Operate the vehicle under the same conditions as when the noise originally occurred. Refer to the notes on the Diagnostic Worksheet.

Generic Squeak and Rattle Troubleshooting

AIS00612

Refer to Table of Contents for specific component removal and installation information.

INSTRUMENT PANEL

Most incidents are caused by contact and movement between:

1. The cluster lid A and instrument panel
2. Acrylic lens and combination meter housing
3. Instrument panel to front pillar garnish
4. Instrument panel to windshield
5. Instrument panel mounting pins
6. Wiring harnesses behind the combination meter
7. A/C defroster duct and duct joint

These incidents can usually be located by tapping or moving the components to duplicate the noise or by pressing on the components while driving to stop the noise. Most of these incidents can be repaired by applying felt cloth tape or silicon spray (in hard to reach areas). Urethane pads can be used to insulate wiring harness.

CAUTION:
Do not use silicone spray to isolate a squeak or rattle. If you saturate the area with silicone, you will not be able to recheck the repair.

CENTER CONSOLE

Components to pay attention to include:

1. Shifter assembly cover to finisher
2. A/C control unit and cluster lid C
3. Wiring harnesses behind audio and A/C control unit

The instrument panel repair and isolation procedures also apply to the center console.

DOORS

Pay attention to the:

1. Finisher and inner panel making a slapping noise
2. Inside handle escutcheon to door finisher
3. Wiring harnesses tapping
4. Door striker out of alignment causing a popping noise on starts and stops

Tapping or moving the components or pressing on them while driving to duplicate the conditions can isolate many of these incidents. You can usually insulate the areas with felt cloth tape or insulator foam blocks from the Nissan Squeak and Rattle Kit (J-43980) to repair the noise.

TRUNK

Trunk noises are often caused by a loose jack or loose items put into the trunk by the owner.
In addition look for:

1. Trunk lid dumpers out of adjustment
2. Trunk lid striker out of adjustment
3. The trunk lid torsion bars knocking together
4. A loose license plate or bracket

Most of these incidents can be repaired by adjusting, securing or insulating the item(s) or component(s) causing the noise.

SUNROOF/HEADLINING

Noises in the sunroof/headlining area can often be traced to one of the following:

1. Sunroof lid, rail, linkage or seals making a rattle or light knocking noise
2. Sunvisor shaft shaking in the holder
3. Front or rear windshield touching headlining and squeaking

Again, pressing on the components to stop the noise while duplicating the conditions can isolate most of these incidents. Repairs usually consist of insulating with felt cloth tape.

SEATS

When isolating seat noise it's important to note the position the seat is in and the load placed on the seat when the noise is present. These conditions should be duplicated when verifying and isolating the cause of the noise.
Cause of seat noise include:

1. Headrest rods and holder
2. A squeak between the seat pad cushion and frame
3. The rear seatback lock and bracket

These noises can be isolated by moving or pressing on the suspected components while duplicating the conditions under which the noise occurs. Most of these incidents can be repaired by repositioning the component or applying urethane tape to the contact area.

UNDERHOOD

Some interior noise may be caused by components under the hood or on the engine wall. The noise is then transmitted into the passenger compartment.
Causes of transmitted underhood noise include:

1. Any component mounted to the engine wall
2. Components that pass through the engine wall
3. Engine wall mounts and connectors
4. Loose radiator mounting pins
5. Hood bumpers out of adjustment
6. Hood striker out of adjustment

These noises can be difficult to isolate since they cannot be reached from the interior of the vehicle. The best method is to secure, move or insulate one component at a time and test drive the vehicle. Also, engine RPM or load can be changed to isolate the noise. Repairs can usually be made by moving, adjusting, securing, or insulating the component causing the noise.

Diagnostic Worksheet

AIS00613

SQUEAK & RATTLE DIAGNOSTIC WORKSHEET

Dear Nissan Customer:
We are concerned about your satisfaction with your Nissan vehicle. Repairing a squeak or rattle sometimes can be very difficult. To help us fix your Nissan right the first time, please take a moment to note the area of the vehicle where the squeak or rattle occurs and under what conditions. You may be asked to take a test drive with a service advisor or technician to ensure we confirm the noise you are hearing.

I. WHERE DOES THE NOISE COME FROM? (circle the area of the vehicle)
The illustrations are for reference only, and may not reflect the actual configuration of your vehicle.

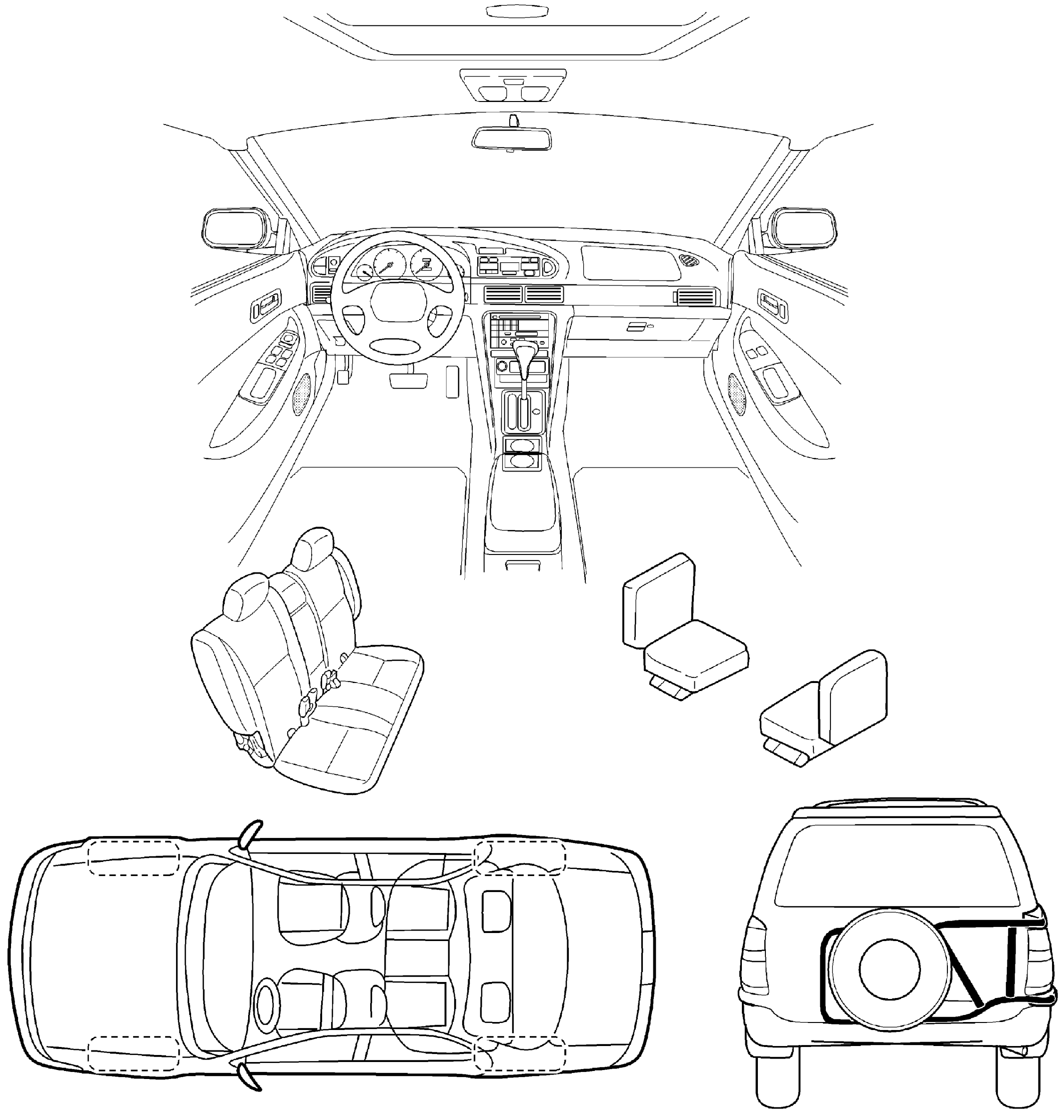

Continue to the back of the worksheet and briefly describe the location of the noise or rattle. In addition, please indicate the conditions which are present when the noise occurs.

PIIB0723E

SQUEAK & RATTLE DIAGNOSTIC WORKSHEET- page 2

Briefly describe the location where the noise occurs:

____

____

II. WHEN DOES IT OCCUR? (check the boxes that apply)

- ❑ anytime
- ❑ 1st time in the morning
- ❑ only when it is cold outside
- ❑ only when it is hot outside
- ❑ after sitting out in the sun
- ❑ when it is raining or wet
- ❑ dry or dusty conditions
- ❑ other: ___________________________________

III. WHEN DRIVING:

- ❑ through driveways
- ❑ over rough roads
- ❑ over speed bumps
- ❑ only at about ____ mph
- ❑ on acceleration
- ❑ coming to a stop
- ❑ on turns : left, right or either (circle)
- ❑ with passengers or cargo
- ❑ other: ________________________
- ❑ after driving ____ miles or ____ minutes

IV. WHAT TYPE OF NOISE?

- ❑ squeak (like tennis shoes on a clean floor)
- ❑ creak (like walking on an old wooden floor)
- ❑ rattle (like shaking a baby rattle)
- ❑ knock (like a knock on a door)
- ❑ tick (like a clock second hand)
- ❑ thump (heavy, muffled knock noise)
- ❑ buzz (like a bumble bee)

TO BE COMPLETED BY DEALERSHIP PERSONNEL
Test Drive Notes:

____

____

	YES	NO	Initials of person performing
Vehicle test driven with customer	❑	❑	______
- Noise verified on test drive	❑	❑	
- Noise source located and repaired	❑	❑	______
- Follow up test drive performed to confirm repair	❑	❑	______

VIN: ______________________ Customer Name: _________________________________

W.O. #: ____________________ Date: ____________

This form must be attached to Work Order

SBT844

WINDSHIELD GLASS AND MOLDING

PFP:72700

Removal and Installation

AIS005Q7

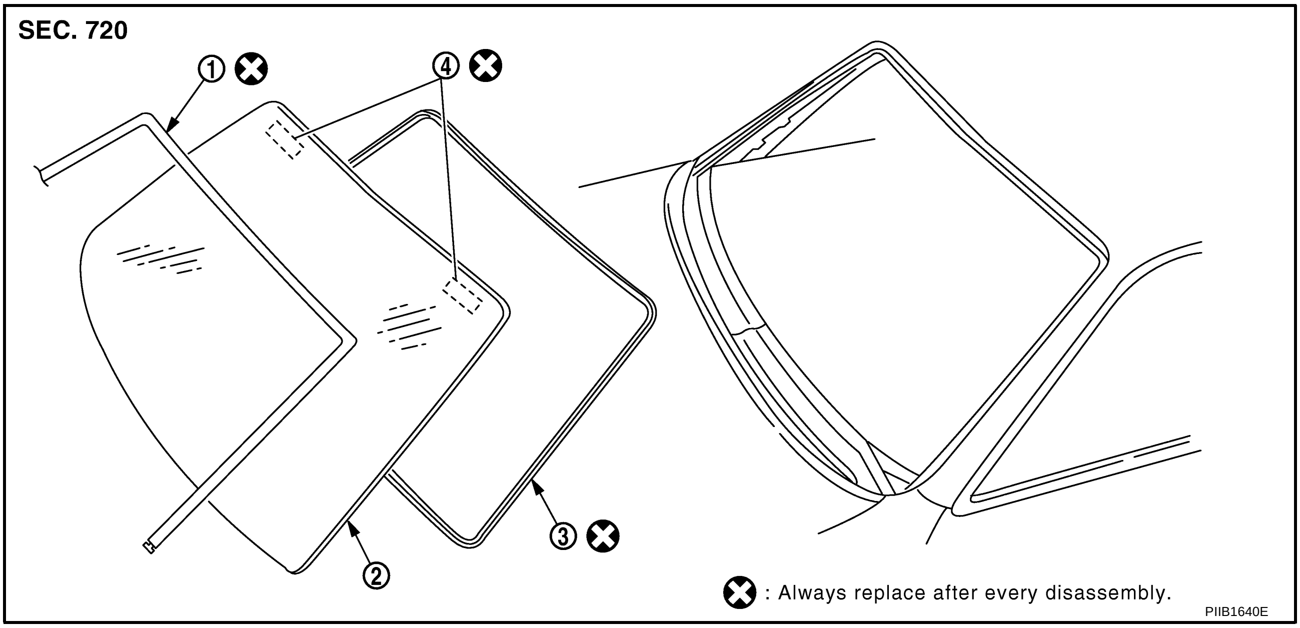

1. Windshield molding
2. Windshield glass
3. Open cell foam dam
4. Spacer

REMOVAL

1. Remove the front pillar garnish and the headlining. Refer to EI-36, "BODY SIDE TRIM" and EI-40, "HEADLINING" .
2. Partially remove the roof rail. Refer to EI-27, "ROOF RAIL" .
3. Remove the cowl top cover. Refer to EI-19, "COWL TOP" .
4. Apply a protective tape around the windshield glass to protect the painted surface from damage.
5. Cut the windshield molding with a cutting knife.

After removing moldings using pliers, remove glass using piano wire or power cutting tool and an inflatable pump bag.

- If a windshield glass is to be reused, mark the body and the glass with mating marks.

WARNING:

When cutting the glass from the vehicle, always wear safety glasses and heavy gloves to help prevent glass splinters from entering your eyes or cutting your hands.

CAUTION:

- **When a windshield glass is to be reused, do not use a cutting knife or power cutting tool.**
- **Be careful not to scratch the glass when removing.**
- **Do not set or stand the glass on its edge. Small chips may develop into cracks.**

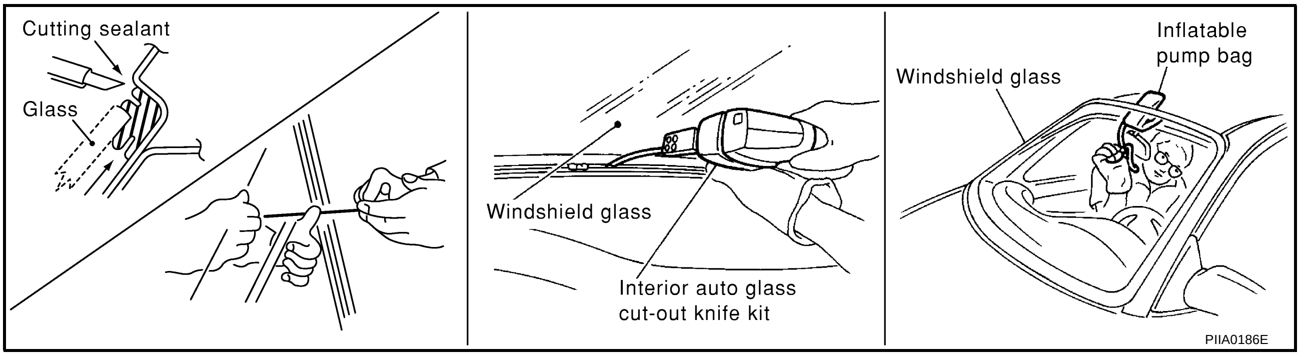

6. Remove the windshield glass, using suction lifter.

INSTALLATION

- Use a genuine Nissan Urethane Adhesive Kit (if available) or equivalent and follow the instructions furnished with it.
- While the urethane adhesive is curing, open a door window. This will prevent the glass from being forced out by passenger compartment air pressure when a door is closed.
- The molding must be installed securely so that it is in position and leaves no gap.
- Inform the customer that the vehicle should remain stationary until the urethane adhesive has completely cured (preferably 24 hours). Curing time varies with temperature and humidity.

WARNING:

- **Keep heat and open flames away as primers and adhesive are flammable.**
- **The materials contained in the kit are harmful if swallowed, and may irritate skin and eyes. Avoid contact with the skin and eyes.**
- **Use in an open, well ventilated location. Avoid breathing the vapors. They can be harmful if inhaled. If affected by vapor inhalation, immediately move to an area with fresh air.**
- **Driving the vehicle before the urethane adhesive has completely cured may affect the performance of the windshield in case of an accident.**

CAUTION:

- **Do not use an adhesive which is past its usable term. Shelf life of this product is limited to six months after the date of manufacture. Carefully adhere to the expiration or manufacture date printed on the box.**
- **Keep primers and adhesive in a cool, dry place. Ideally, they should be stored in a refrigerator.**
- **Do not leave primers or adhesive cartridge unattended with their caps open or off.**
- **The vehicle should not be driven for at least 24 hours or until the urethane adhesive has completely cured. Curing time varies depending on temperature and humidity. The curing time will increase under lower temperature and lower humidity.**

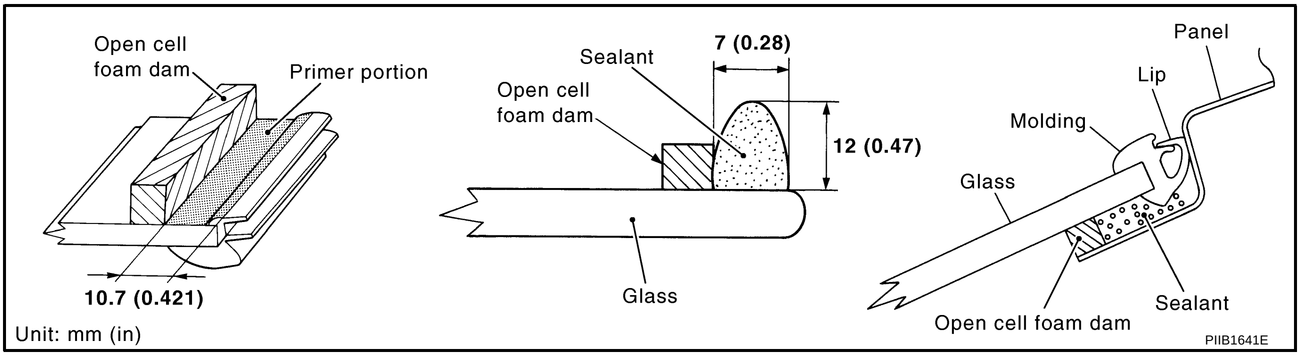

Repairing Water Leaks

Leaks can be repaired without removing and reinstalling glass.
If water is leaking between the urethane adhesive material and body or glass, determine the extent of leakage. This can be done by applying water to the windshield area while pushing glass outward.
To stop the leak, apply primer (if necessary) and then urethane adhesive to the leak point.

SIDE WINDOW GLASS

PFP:83300

Removal and Installation

AIS005Q8

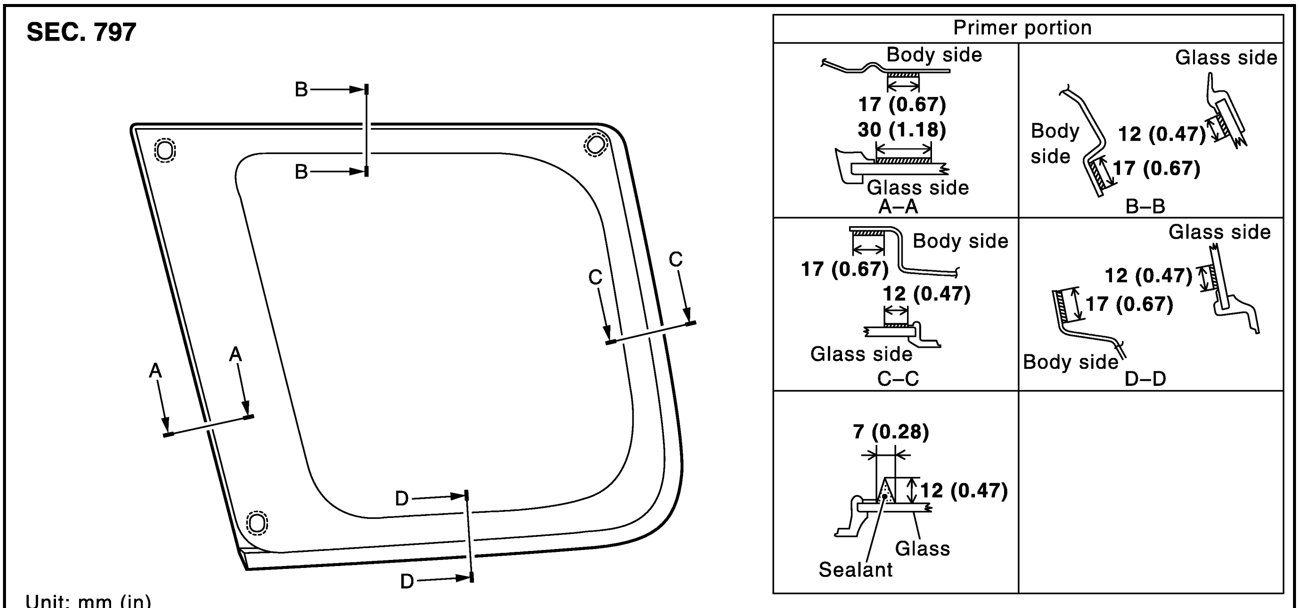

SIIA0168E

REMOVAL

1. Remove luggage side lower finisher and rear pillar finisher. Refer to EI-36, "BODY SIDE TRIM" .
2. Apply protective tape on body panels around side window glass to protect painted surfaces from damage.
   - Remove glass using piano wire or power cutting tool and an inflatable pump bag.
   - If a side window glass is to be reused, mark the body and the glass with mating marks.

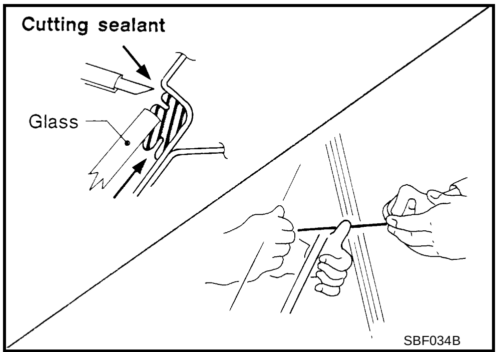

SBF034B

WARNING:

When cutting the glass from the vehicle, always wear safety glasses and heavy gloves to help prevent glass splinters from entering your eyes or cutting your hands.

CAUTION:

- **Be careful not to scratch the glass when removing.**
- **Do not set or stand the glass on its edge. Small chips may develop into cracks.**

INSTALLATION

- With a knife, scrape off remaining adhesive left around on the side of vehicle body to as thin and flat as 2 mm (0.08 in).

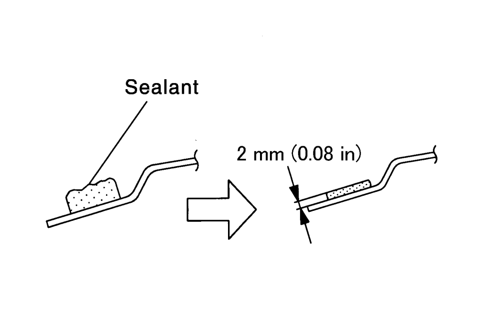

SIIA1097E

- Use a genuine Nissan Urethane Adhesive Kit (if available) or equivalent and follow the instructions furnished with it.
- While the urethane adhesive is curing, open a door window. This will prevent the glass from being forced out by passenger compartment air pressure when a door is closed.
- The molding must be installed securely so that it is in position and leaves no gap.

- Inform the customer that the vehicle should remain stationary unit the urethane adhesive has completely cured (preferably 24 hours). Curing time varies with temperature and humidity.

WARNING:

- **Keep heat and open flames away as primers and adhesive are flammable.**
- **The materials contained in the Kit are harmful if swallowed, and may irritate skin and eyes. Avoid contact with the skin and eyes.**
- **Use in an open, well ventilated location. Avoid breathing the vapors. They can be harmful if inhaled. if affected by vapor inhalation, immediately move to an area with fresh air.**
- **Driving the vehicle before the urethane adhesive has completely cured may affect the performance of the side window in case of an accident.**

CAUTION:

- **Do not use an adhesive which is past its usable term. Shelf life of this product is limited to six months after the date of manufacture. Carefully adhere to the expiration or manufacture date printed on the box.**
- **Keep primers and adhesive in a cool, dry place. Ideally, they should be stored in a refrigerator.**
- **Do not leave primers or adhesive cartridge unattended with their caps open or off.**
- **The vehicle should not be driven for at least 24 hours or until the urethane adhesive has completely cured. Curing time varies depending on temperature and humidity. The curing time will increase under lower temperature and lower humidity.**

REPAIRING WATER LEAKS

Leaks can be repaired without removing and reinstalling glass.
If water is leaking between the urethane adhesive material and body or glass, determine the extent of leakage. This can be done by applying water to the side window area while pushing glass outward.
To stop the leak, apply primer (if necessary) and then urethane adhesive to the leak point.

BACK DOOR WINDOW GLASS

PFP:90300

Removal and Installation

AIS005Q9

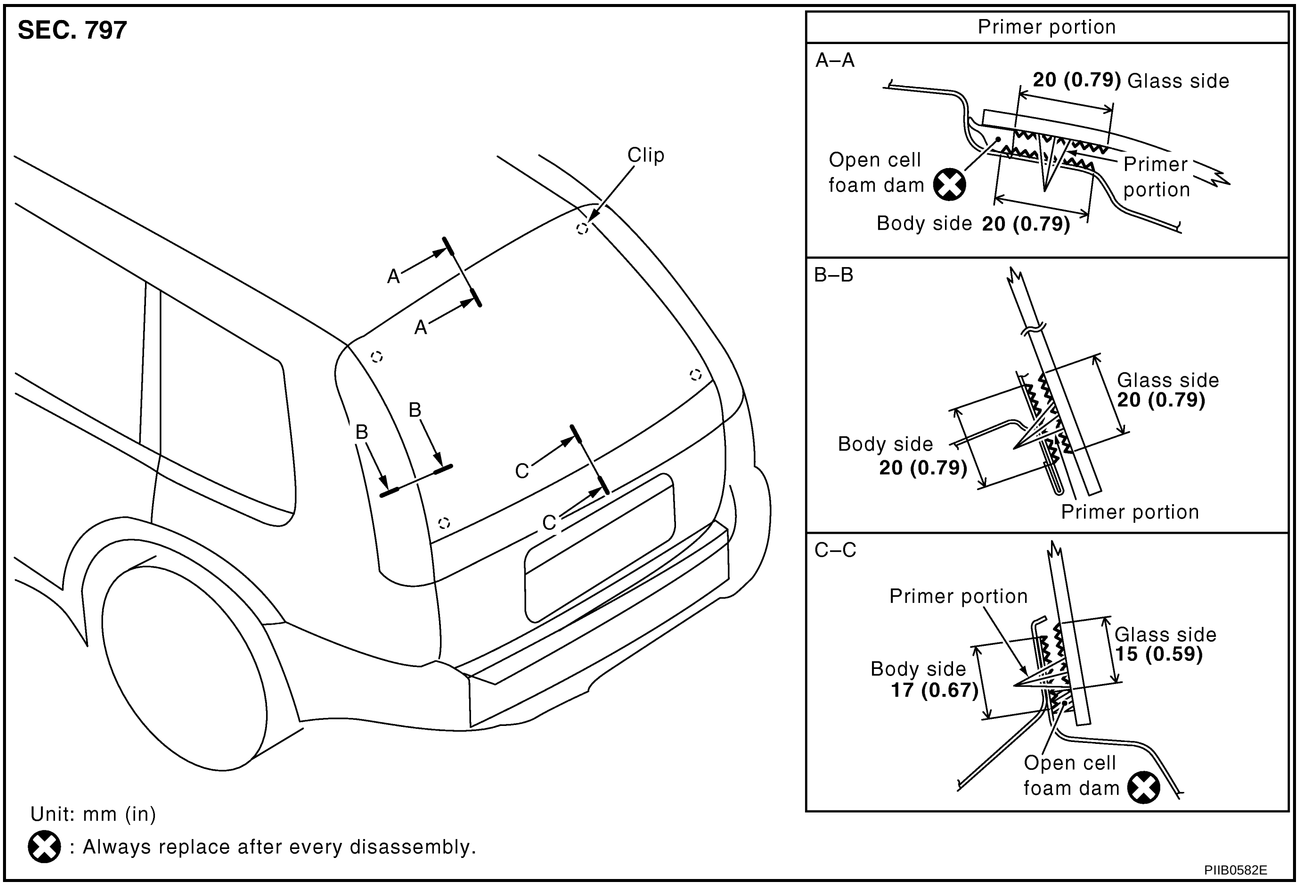

A
B
C
D
E
F
G
H
GW
J
K
L
M

REMOVAL

1. Remove rear wiper arm. Refer to WW-14, "Removal and Installation of Rear Wiper Arms, Adjustment for Wiper Arms Stop Location" .
2. Remove rear washer nozzle. Refer to WW-16, "Removal and Installation of Rear Washer Nozzle" .
3. Remove rear window defogger connectors.
4. Remove high-mounted stop lamp. Refer to LT-34, "Removal and Installation of High-Mounted Stop Lamp"
5. Apply a protective tape around the back door window glass to prevent the painted surface from being damaged.
6. Cut adhesive using piano wire or power cutting tool and an inflatable pump bag.

- If a back door window glass is to be reused, mark the body and the glass with matching marks.

WARNING:

When cutting the glass from the vehicle, always wear safety glasses and heavy gloves to help prevent glass splinters from entering your eyes or cutting your hands.

CAUTION:

- **When a back door window glass is to be reused, do not use a cutting knife or power cutting tool.**
- **Be careful not to scratch the glass when removing.**

- **Do not set or stand the glass on its edge. Small chips may develop into cracks.**

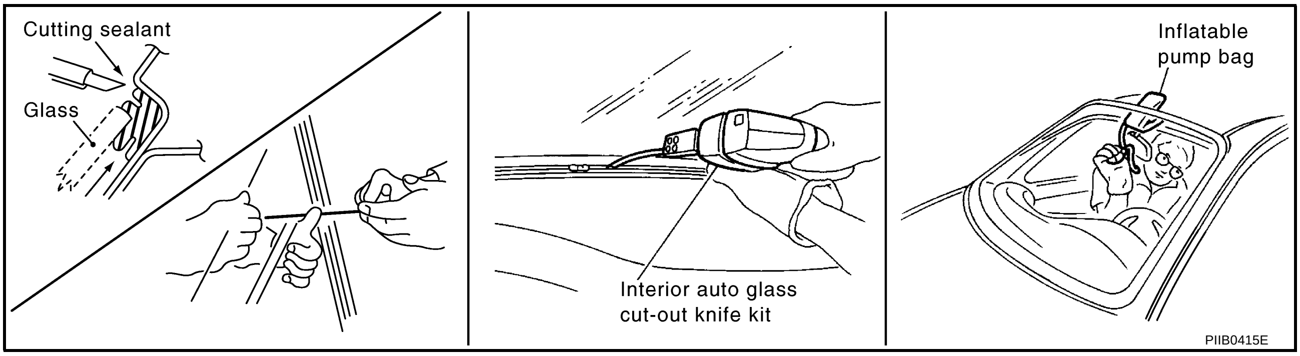

7. Remove the back door window glass, using suction lifter.

INSTALLATION

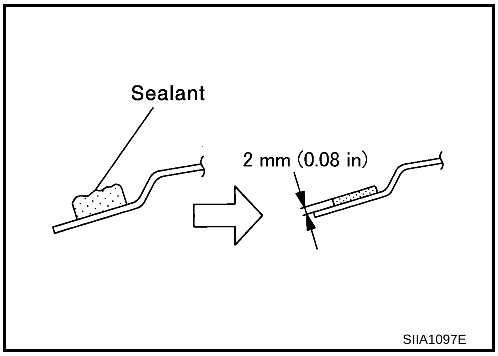

- With a knife, scrape off remaining adhesive left around on the side of vehicle body to as thin and flat as 2 mm (0.08 in).
- Use a genuine Nissan Urethane Adhesive Kit (if available) or equivalent and follow the instructions furnished with it.
- While the urethane adhesive is curing, open a door window. This will prevent the glass from being forced out by passenger compartment air pressure when a door is closed.
- Inform the customer that the vehicle should remain stationary until the urethane adhesive has completely cured (preferably 24 hours). Curing time varies with temperature and humidity.

WARNING:

- **Keep heat and open flames away as primers and adhesive are flammable.**
- **The materials contained in the kit are harmful if swallowed, and may irritate skin and eyes. Avoid contact with the skin and eyes.**
- **Use in an open, well ventilated location. Avoid breathing the vapors. They can be harmful if inhaled. If affected by vapor inhalation, immediately move to an area with fresh air.**
- **Driving the vehicle before the urethane adhesive has completely cured may affect the performance of the back door window in case of an accident.**

CAUTION:

- **Do not use an adhesive which is past its usable term. Shelf life of this product is limited to six months after the date of manufacture. Carefully adhere to the expiration or manufacture date printed on the box.**
- **Keep primers and adhesive in a cool, dry place. Ideally, they should be stored in a refrigerator.**
- **Do not leave primers or adhesive cartridge unattended with their caps open or off.**
- **The vehicle should not be driven for at least 24 hours or until the urethane adhesive has completely cured. Curing time varies depending on temperature and humidity. The curing time will increase under lower temperature and lower humidity.**

REAR WINDOW DEFOGGER

PFP:25350

Component Parts and Harness Connector Location

AIS005QA

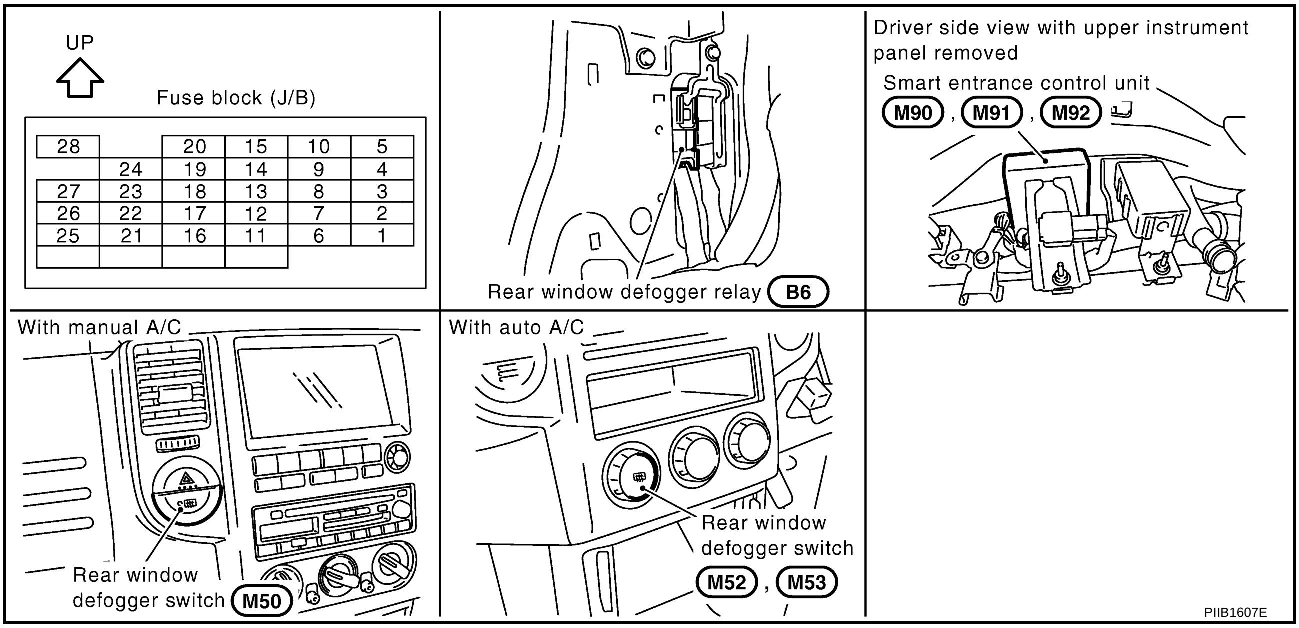

System Description

AIS0062J

The rear window defogger system is controlled by smart entrance control unit.The rear window defogger operates only for approximately 15 minutes.
Power is supplied at all times

- through 20A fuse [No.25, located in the fuse block (J/B)]
- to rear window defogger relay terminal 3
- through 10A fuse [No.27, located in the fuse block (J/B)]
- to rear window defogger relay terminal 6 (with door mirror defogger)
- through 10A fuse [No.26, located in the fuse block (J/B)]
- to smart entrance control unit terminal 49

With the ignition switch in the ON or START position,
Power is supplied

- through 10A fuse [No.5, located in the fuse block (J/B)]
- to rear window defogger relay terminal 1 and
- to smart entrance control unit terminal 27.

Ground is supplied

- to smart entrance control unit terminals 43 and 64
- through body ground M27 and M70.
- to rear window defogger switch terminals 2 and 4 (with manual A/C) or
- to A/C auto amp. terminal 3 (with auto A/C)
- through body ground M27 and M70.

When the rear window defogger switch is turned ON,
Ground is supplied

- to smart entrance control unit terminal 14
- through rear window defogger switch 1 (with manual A/C) or
- through A/C auto amp. terminal 22 (with auto A/C)

Terminal 37 of the smart entrance control unit then supplies ground to the rear window defogger relay terminal 2.
With power and ground supplied, the rear window defogger relay is energized.
Power is supplied

- through rear window defogger relay terminal 5 and 7

- to the rear window defogger and door mirror defogger.

The rear window defogger has an independent ground.
With power and ground supplied, the rear window defogger filaments heat and defog the rear window.
When the system is activated, the rear window defogger indicator illuminates in the rear window defogger switch.
Power is supplied

- through rear window defogger relay terminal 5
- to rear window defogger switch terminal 3 (with manual A/C) or
- to A/C auto amp. terminal 23 (with auto A/C).

Wiring Diagram — DEF —

AIS005QD

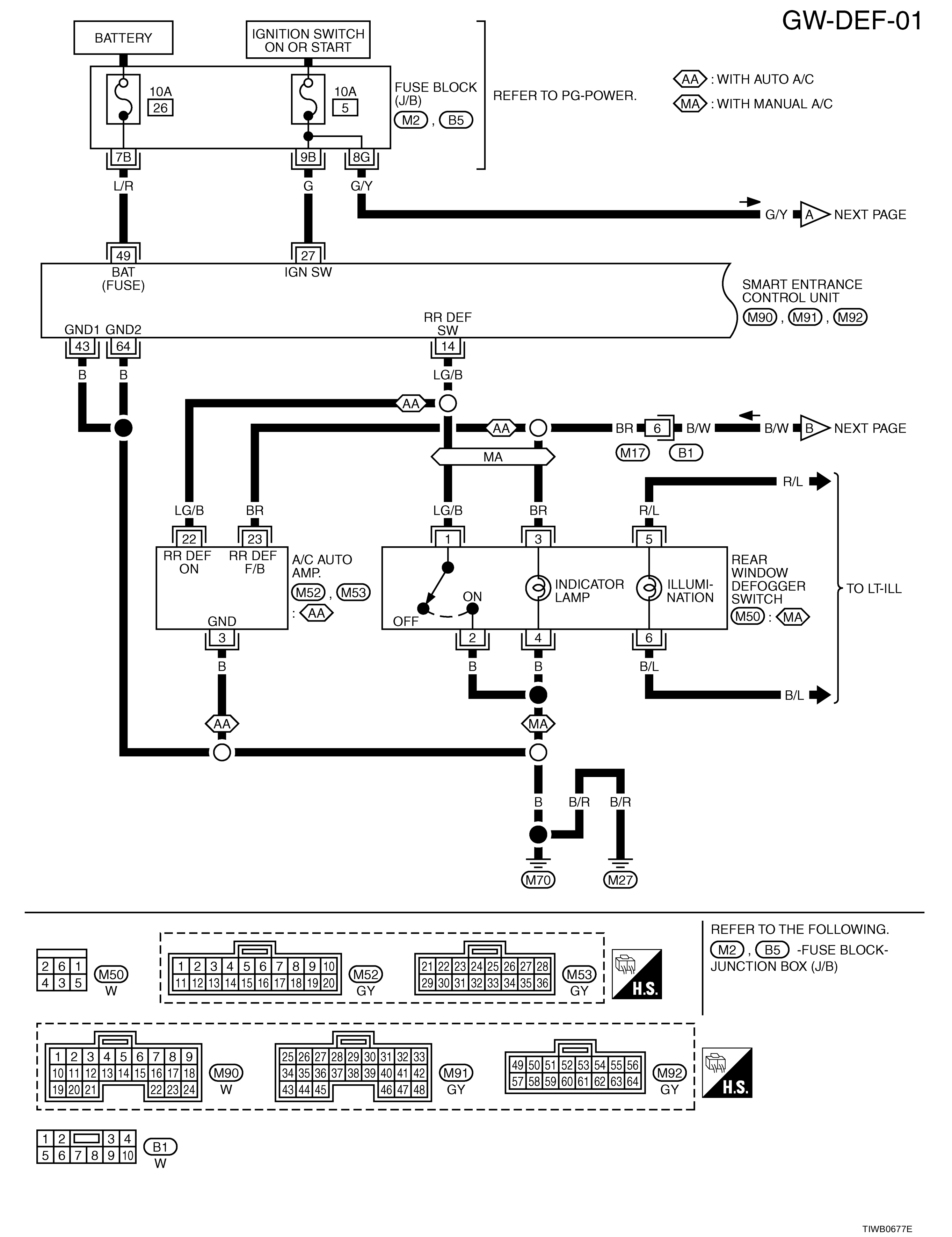

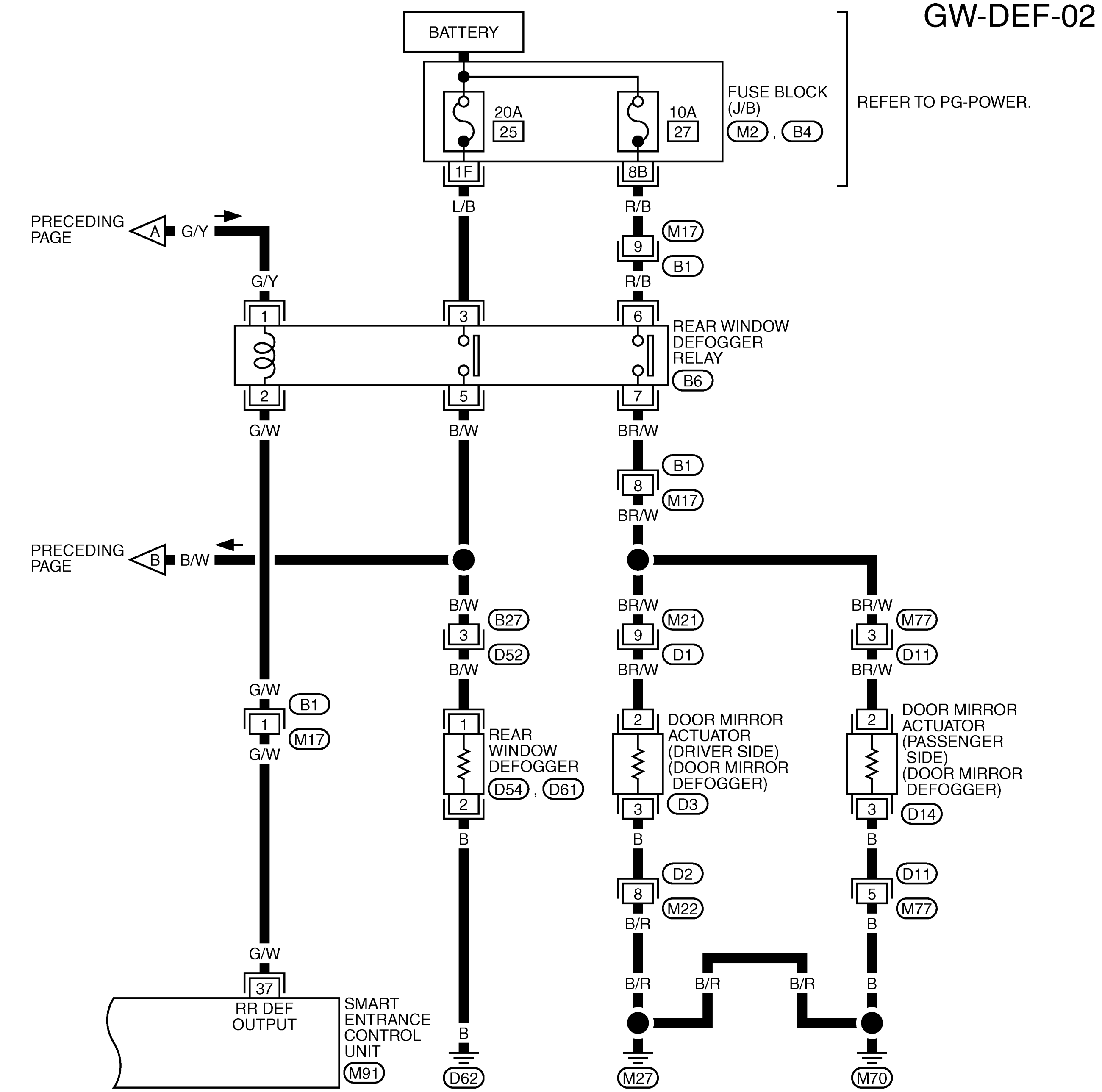

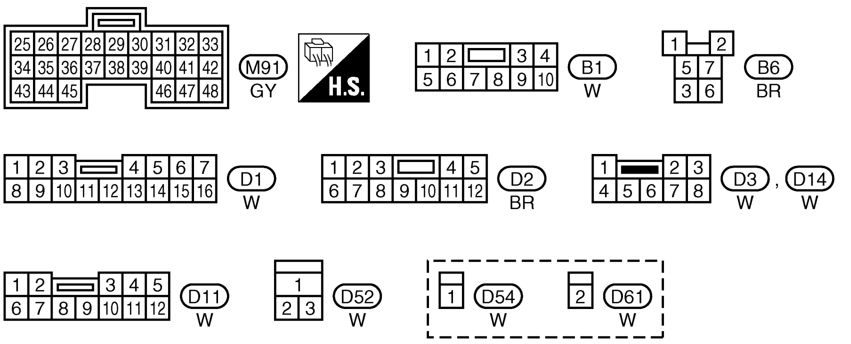

REFER TO THE FOLLOWING.
M2 , B4 -FUSE BLOCK-
JUNCTION BOX (J/B)

TIWB0067E

Terminals and Reference Value for Smart Entrance Control Unit

AIS005QF

TERMINAL	WIRE COLOR	ITEM	CONDITION		VOLTAGE (V) (Approx.)
14	LG/B	Rear window defogger switch signal	Rear window defogger switch	: ON	0
				: OFF	Battery voltage
27	G	Ignition switch ON	Ignition switch position (ON or START)		Battery voltage
37	G/W	Rear window defogger relay control signal	Rear window defogger switch	: ON	0
				: OFF	Battery voltage
43	B	Ground	—		0
49	L/R	Power source (Fuse)	—		Battery voltage
64	B	Ground	—		0

Work Flow

AIS0062Q

1. Check the symptom and customer's requests.
2. Understand the outline of system. Refer to GW-17, "System Description"
3. According to the trouble diagnosis chart, repair or replace the cause of the malfunction. Refer to GW-21, "Trouble Diagnoses"
4. Does rear window defogger operate normally? YES: GO TO 5, NO: GO TO 3.
5. INSPECTION END.

Trouble Diagnoses

AIS0062K

- Make sure that other systems using the signal of the following systems operate normally.

Symptom	Diagnoses / Service procedure	Refer to page
Rear window defogger and door mirror defogger does not operate.	1. Check rear window defogger relay power supply	GW-21
	2. Check smart entrance control unit power supply and ground	GW-23
	3. Check rear window defogger switch circuit	GW-24
Rear window defogger alone does not operate.	1. Check rear window defogger circuit	GW-26
Door mirror defogger alone does not operate.	1. Check door mirror defogger circuit	GW-27
Rear window defogger switch does not light, but rear window defogger operates.	1. Check rear window defogger indicator lamp circuit	GW-29

Check Rear Window Defogger Relay Power Supply

AIS0062R

1. CHECK FUSE

- Check 10A fuse [No. 5, located in the fuse block (J/B)]
- Check 10A fuse [No. 27, located in the fuse block (J/B)]
- Check 20A fuse [No. 25, located in the fuse block (J/B)]

NOTE:
Refer to GW-17, "Component Parts and Harness Connector Location"

OK or NG

OK >> GO TO 2.
NG >> If fuse is blown, be sure to eliminate cause of malfunction before installing new fuse. Refer to PG-2, "POWER SUPPLY ROUTING" .

2. CHECK REAR WINDOW DEFOGGER RELAY POWER SUPPLY CIRCUIT

1. Turn ignition switch OFF.
2. Remove rear window defogger relay.
3. Turn ignition switch ON.
4. Check voltage between rear window defogger relay harness connector B6 terminal 1, 3, 6 and ground.

1 (G/Y) - Ground : Battery voltage
3 (L/B) - Ground : Battery voltage
6 (R/B) - Ground : Battery voltage

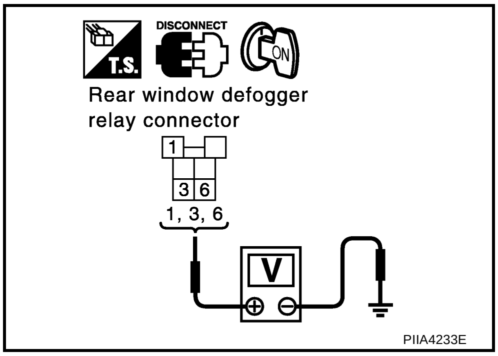

OK or NG

OK >> GO TO 3.
NG >> Repair or replace harness between fuse block (J/B) and rear window defogger relay.

3. CHECK REAR WINDOW DEFOGGER RELAY

Check continuity between rear window defogger relay terminal 3 and 5, 6 and 7.

Terminal		Condition	Continuity
3	5	12V direct current supply between terminal 1 and 2	Yes
		Not current supply	No
6	7	12V direct current supply between terminal 1 and 2	Yes
		Not current supply	No

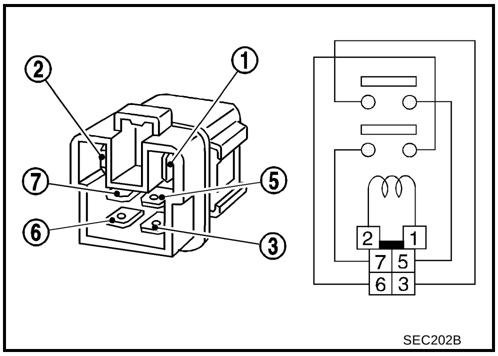

OK or NG

OK >> GO TO 4.
NG >> Replace rear window defogger relay

4. CHECK REAR WINDOW DEFOGGER RELAY GROUND CIRCUIT

1. Turn ignition switch OFF.
2. Install rear window defogger relay.
3. Turn ignition switch ON.
4. Check voltage between smart entrance control unit harness connector M91 terminal 37 and ground.

37 (G/W) - Ground : Battery voltage

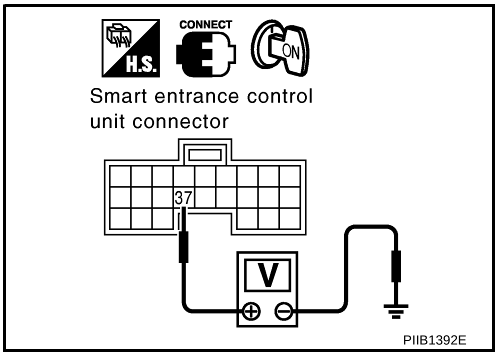

OK or NG

OK >> Rear window defogger relay power supply is OK.
NG >> GO TO 5.

5. CHECK HARNESS CONTINUITY

1. Turn ignition switch OFF.
2. Disconnect smart entrance control unit connector and rear window defogger relay.
3. Check continuity between smart entrance control unit harness connector M91 terminal 37 and rear window defogger relay harness connector B6 terminal 2.

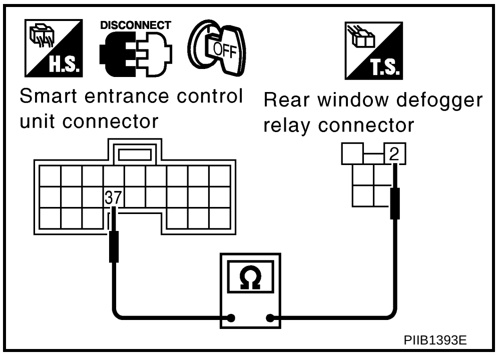

37 (G/W) - 2 (G/W) : Continuity should exist.

OK or NG

OK >> Check condition of harness and connector.
NG >> Repair or replace harness between smart entrance control unit and rear window defogger relay.

Check Smart Entrance Control Unit Power Supply and Ground

AIS0062L

1. CHECK FUSE

- Check 10A fuse [No. 5, located in the fuse block (J/B)]
- Check 10A fuse [No. 26, located in the fuse block (J/B)]

NOTE:
Refer to GW-17, "Component Parts and Harness Connector Location"

OK or NG

OK >> GO TO 2.
NG >> If fuse is blown, be sure to eliminate cause of malfunction before installing new fuse. Refer to PG-2, "POWER SUPPLY ROUTING"

2. CHECK POWER SUPPLY CIRCUIT

1. Turn ignition switch ON.
2. Check voltage between smart entrance control unit harness connector M91, M92 terminal 27, 49 and ground.

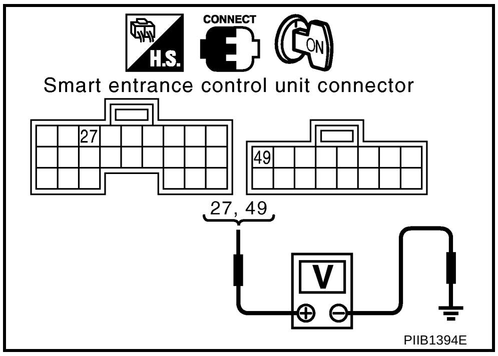

27 (G) - Ground : Battery voltage
49 (L/R) - Ground : Battery voltage

OK or NG

OK >> GO TO 3.
NG >> Check smart entrance control unit power supply circuit for open or short.

3. CHECK GROUND CIRCUIT

1. Turn ignition switch OFF.
2. Disconnect smart entrance control unit connector.
3. Check continuity between smart entrance control unit harness connector M91, 92 terminal 43, 64 and ground.

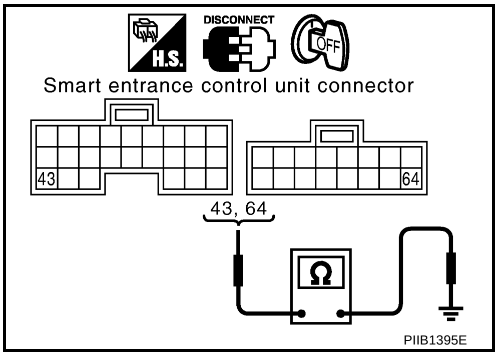

43 (B) - Ground : Continuity should exist.
64 (B) - Ground : Continuity should exist.

OK or NG

OK >> Power supply and ground circuit are OK.
NG >> Check smart entrance control unit ground circuit for open or short.

Check Rear Window Defogger Switch Circuit

AIS0062M

1. CHECK REAR WINDOW DEFOGGER SWITCH OPERATION

1. Turn ignition switch ON.
2. Check voltage between smart entrance control unit connector and ground.

Connector	Terminal (Wire color) (+)	Terminal (Wire color) (-)	Condition		Voltage (V) (Approx.)
M90	14 (LG/B)	Ground	Rear window defogger switch	: ON	0
				: OFF	Battery voltage

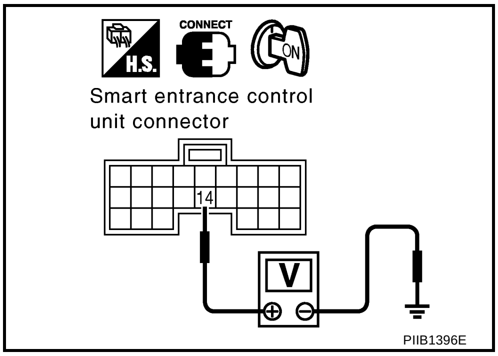

OK or NG

OK >> Rear window defogger switch is OK.
NG >> GO TO 2.

2. CHECK REAR WINDOW DEFOGGER SWITCH CIRCUIT

1. Turn ignition switch OFF.
2. Disconnect smart entrance control unit and rear window defogger switch (with manual A/C) or A/C auto amp, (with auto A/C) connector.
3. **(With manual A/C)**
   Check continuity between smart entrance control unit harness connector M90 terminal 14 and rear window defogger switch harness connector M50 terminal 1.

   14 (LG/B) - 1 (LG/B) : Continuity should exist.

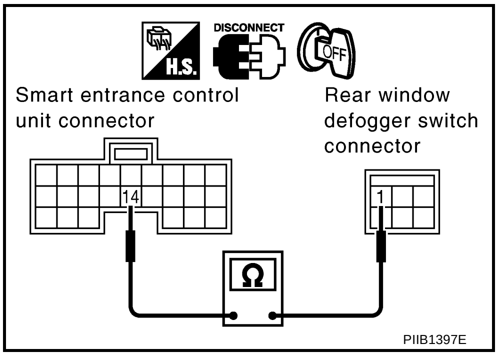

(With auto A/C)
Check continuity between smart entrance control unit harness connector M90 terminal 14 and A/C auto amp, harness connector M53 terminal 22.

14 (LG/B) - 22 (LG/B) : Continuity should exist.

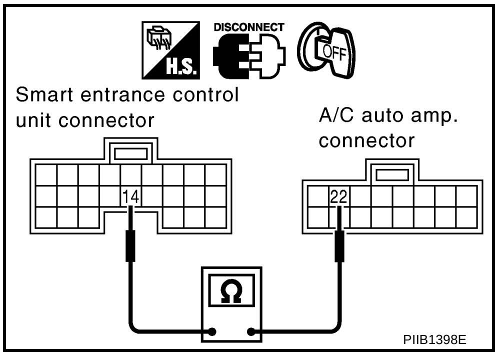

OK >> GO TO 3.
NG >> Repair or replace harness between smart entrance control unit and rear window defogger relay (without auto A/C) or A/C auto amp, (with auto A/C).

3. CHECK SMART ENTRANCE CONTROL UNIT OUTPUT SIGNAL

1. Connect smart entrance control unit connector.
2. Turn ignition switch ON.
3. Check voltage between smart entrance control unit harness connector M90 terminal 14 and ground.

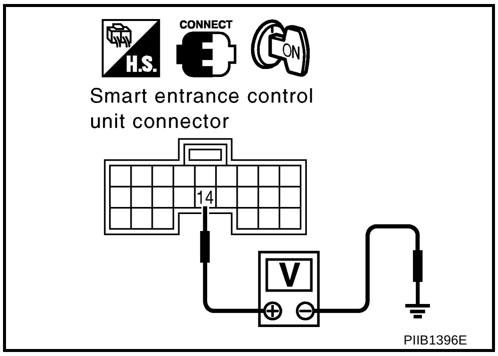

14 (LG/B) - Ground : Battery voltage

OK or NG

OK >>
- GO TO 4. (without auto A/C)
- Check A/C auto amp. (with auto A/C). Refer to ATC-32

NG >> Replace smart entrance control unit.

4. CHECK REAR WINDOW DEFOGGER SWITCH

Rear window defogger switch operate, check continuity between rear window defogger switch connector M50 terminal 1 and 2.

Connector	Terminal		Condition		Continuity
M50	1	2	Rear window: defogger switch	: ON	Yes
				: OFF	No

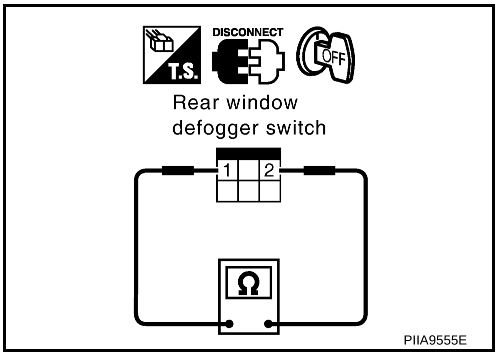

OK or NG

OK >> GO TO 5.
NG >> Replace rear window defogger switch.

5. CHECK REAR WINDOW DEFOGGER SWITCH GROUND

Check continuity between rear window defogger switch harness connector M50 terminal 2 and ground.

2 (B) - Ground : Continuity should exist.

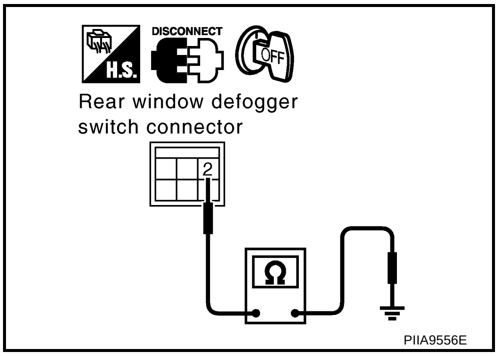

OK or NG

OK >> Check condition of harness and connector.
NG >> Repair or replace harness between rear window defogger switch and ground.

Check Rear Window Defogger Circuit

AIS0062N

1. CHECK REAR WINDOW DEFOGGER POWER SUPPLY CIRCUIT

1. Turn ignition switch OFF.
2. Disconnect rear window defogger connector.
3. Turn ignition switch ON.
4. Check voltage between rear window defogger harness connector and ground.

Connector	Terminal (Wire color)		Condition		Voltage (V) (Approx.)
	(+)	(-)			
D54	1 (B/W)	Ground	Rear window defogger switch	: ON	Battery voltage
				: OFF	0

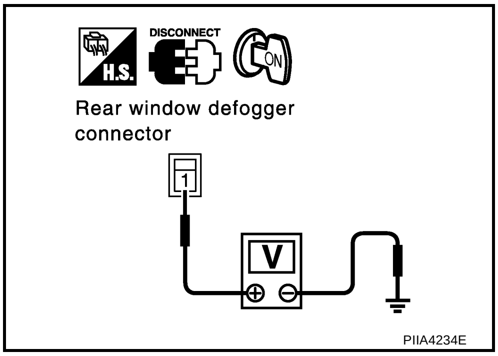

PIIA4234E

OK or NG

OK >> GO TO 2.
NG >> GO TO 3.

2. CHECK REAR WINDOW DEFOGGER GROUND CIRCUIT

1. Turn ignition switch OFF.
2. Check continuity between rear window defogger harness connector D61 terminal 2 and ground.

2 (B) - Ground : Continuity should exist.

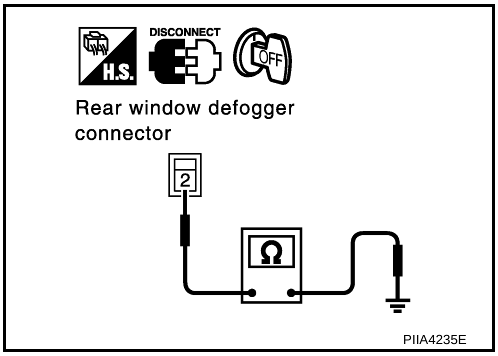

PIIA4235E

OK or NG

OK >> Check filament, Refer to GW-31, "Filament Check"
- If filament is OK
  Check condition of harness and connector.
- If filament is NG
  Repair filament.

NG >> Repair or replace harness between rear window defogger and ground.

3. CHECK HARNESS CONTINUITY

1. Turn ignition switch OFF.
2. Remove the rear window defogger relay.
3. Check continuity between rear window defogger relay harness connector B6 terminal 5 and rear window defogger harness connector D54 terminal 1.

5 (B/W) - 1 (B/W) : Continuity should exist.

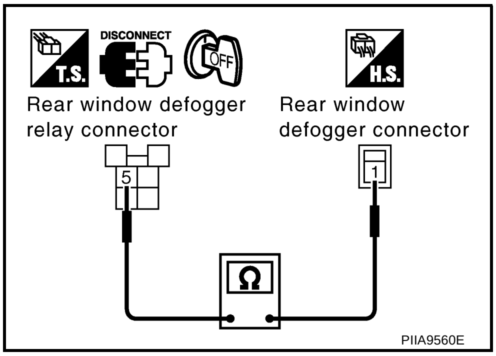

PIIA9560E

OK or NG

OK >> Check condition of harness and connector.
NG >> Repair or replace harness between rear window defogger relay and rear window defogger.

Check Door Mirror Defogger Circuit

AIS0062O

1. CHECK FUSE

- Check 10A fuse [No.27, located in fuse block (J/B)]

NOTE:
Refer to GW-17, "Component Parts and Harness Connector Location"

OK or NG

OK >> GO TO 2.
NG >> If fuse is blown, be sure to eliminate cause of malfunction before installing new fuse. Refer to PG-2, "POWER SUPPLY ROUTING"

2. CHECK REAR WINDOW DEFOGGER RELAY POWER SUPPLY CIRCUIT

1. Turn ignition switch OFF.
2. Remove rear window defogger relay.
3. Turn ignition switch ON.
4. Check voltage between rear window defogger relay harness connector B6 terminal 6 and ground.

6 (R/B) - Ground : Battery voltage

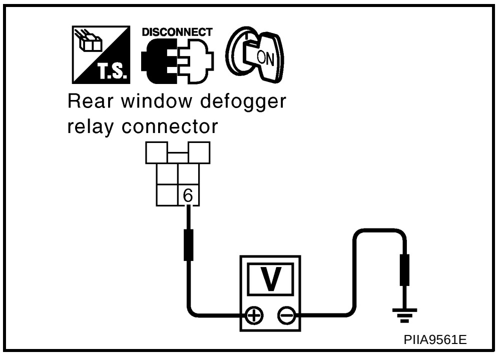

PIIA9561E

OK or NG

OK >> GO TO 3.
NG >> Repair or replace harness between fuse block (J/B) and rear window defogger relay.

3. CHECK REAR WINDOW DEFOGGER RELAY

Check continuity between rear window defogger relay terminal 6 and 7.

Terminal		Condition	Continuity
6	7	12V direct current supply between terminals 1 and 2	Yes
		No current supply	No

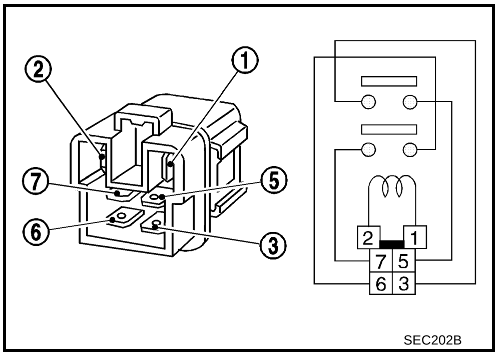

SEC202B

OK or NG

OK >> GO TO 4.
NG >> Replace rear window defogger relay.

4. CHECK DOOR MIRROR DEFOGGER POWER SUPPLY

1. Turn ignition switch OFF.
2. Installation rear window defogger relay.
3. Turn ignition switch ON.
4. Check voltage between door mirror actuator harness connector D3 (driver side), D14 (passenger side) terminal 2 and ground.

Connector	Terminal (Wire color)		Condition		Voltage (V) (Approx.)
	(+)	(-)			
D3 D14	2 (BR/W)	Ground	Rear window defogger switch	: ON	Battery voltage
				: OFF	0

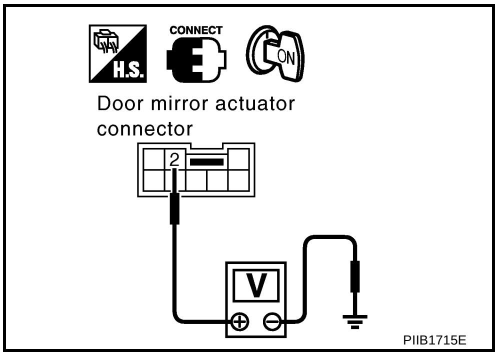

OK or NG

OK >> GO TO 5.
NG >> GO TO 6.

5. CHECK DOOR MIRROR DEFOGGER GROUND

1. Turn ignition switch OFF.
2. Disconnect door mirror actuator connector.
3. Check continuity between door mirror actuator harness connector D3 (driver side), D14 (passenger side) terminal 3 and ground.

3 (B) - Ground : Continuity should exist.

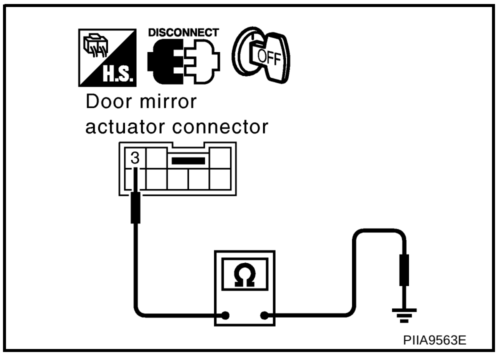

OK or NG

OK >> Replace malfunction door mirror actuator.
NG >> Repair or replace harness between door mirror actuator and ground.

6. CHECK HARNESS CONTINUITY

1. Turn ignition switch OFF.
2. Disconnect door mirror actuator connector and rear window defogger relay.
3. Check continuity between door mirror actuator harness connector D3 (driver side), D14 (passenger side) terminal 2 and rear window defogger relay harness connector B6 terminal 7.

2 (BR/W) - 7 (BR/W) : Continuity should exist.

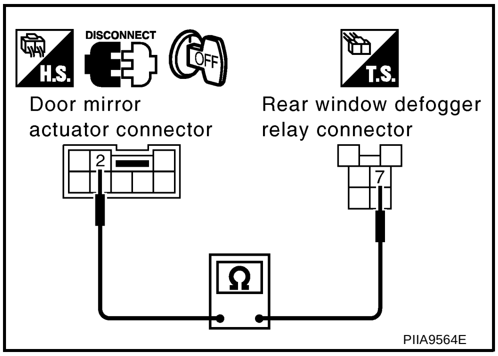

OK or NG

OK >> Check condition of harness and connector.
NG >> Repair or replace harness between door mirror actuator and rear window defogger relay.

Check Rear Window Defogger Indicator Lamp Circuit

AIS0062P

1. CHECK REAR WINDOW DEFOGGER SIGNAL

1. Turn both ignition switch and rear window defogger switch ON.
2. **(With manual A/C)**
   Check voltage between rear window defogger switch harness connector M50 terminal 3 and ground.

   3 (BR) - Ground : Battery voltage

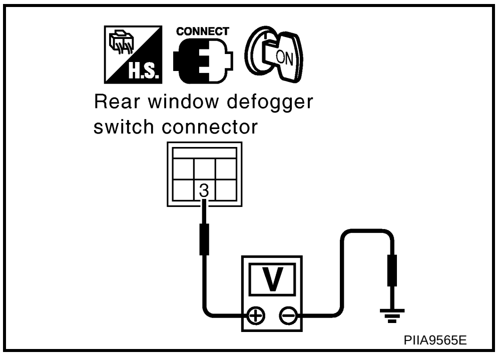

PIIA9565E

(With auto A/C)
Check voltage between A/C auto amp, harness connector M53 terminal 23 and ground.

23 (BR) - Ground : Battery voltage

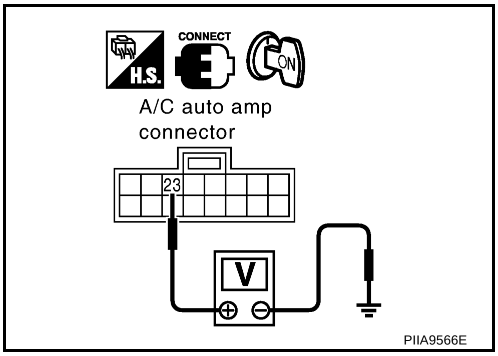

PIIA9566E

OK or NG

OK >> GO TO 3.
NG >> GO TO 2.

2. CHECK HARNESS CONTINUITY

1. Turn ignition switch OFF.
2. Disconnect rear window defogger switch (without auto A/C) or A/C auto amp, (with auto A/C) connector and rear window defogger relay.
3. **(With manual A/C)**
   Check continuity between rear window defogger switch harness connector M50 terminal 3 and rear window defogger relay harness connector B6 terminal 5.

   3 (BR) - 5 (B/W) : Continuity should exist.

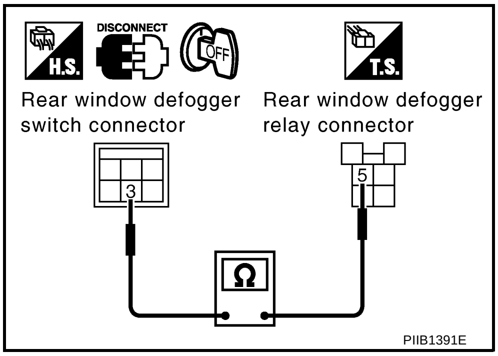

(With auto A/C)
Check continuity between A/C auto amp, harness connector M53 terminal 23 and rear window defogger relay harness connector B6 terminal 5.

23 (BR) - 5 (B/W) : Continuity should exist.

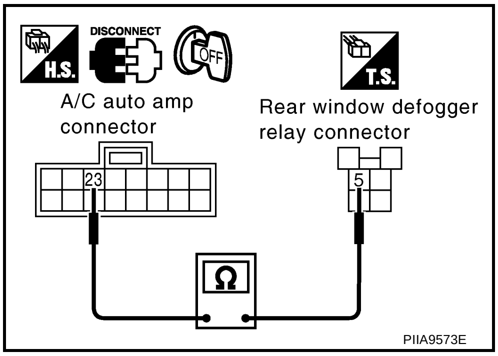

OK or NG

OK >>
- GO TO 3. (without auto A/C)
- Check A/C auto amp. (with auto A/C). Refer to ATC-32

NG >> Repair or replace harness between rear window defogger switch (without auto A/C) or A/C auto amp, (with auto A/C) and rear window defogger relay.

3. CHECK REAR WINDOW DEFOGGER INDICATOR LAMP GROUND

Check continuity between rear window defogger switch harness connector M50 terminal 4 and ground.

4 (B) - Ground : Continuity should exist.

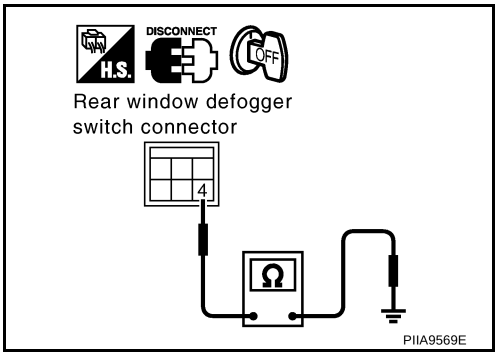

OK or NG

OK >> Replace indicator lamp bulb.

NG >> Repair or replace harness between rear window defogger switch and ground.

Filament Check

AIS005QQ

1. When measuring voltage, wrap tin foil around the top of the negative probe.Then press the foil against the wire with your finder.

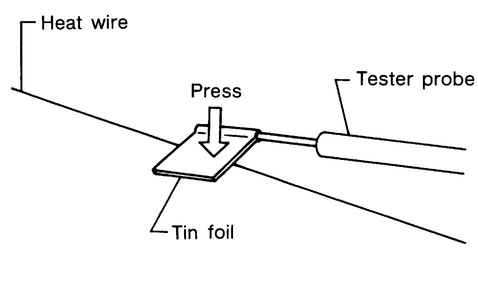

SEL122R

2. Attach probe circuit tester (in Volt range) to middle portion of each filament.

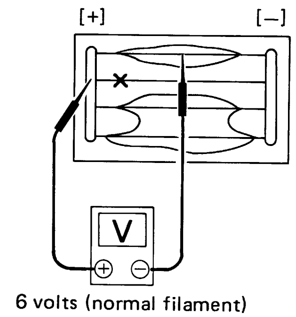

SEL263

3. If a filament is burned out, circuit tester registers 0 or battery voltage.
4. To locate burned out point, move probe to left and right along filament. Test needle will swing abruptly when probe passes the point.

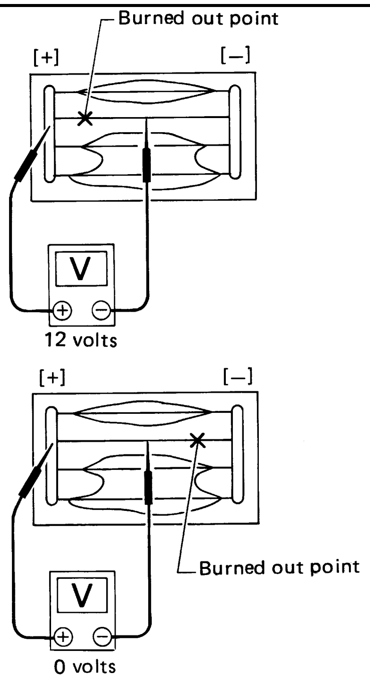

SEL265

Filament Repair

AIS005QR

REPAIR EQUIPMENT

- Conductive silver composition (Dupont No. 4817 or equivalent)
- Ruler 30 cm(11.8in) long
- Drawing pen
- Heat gun
- Alcohol
- Cloth

A
B
C
D
E
F
G
H
GW
J
K
L
M

REPAIRING PROCEDURE

1. Wipe broken heat wire and its surrounding area clean with a cloth dampened alcohol.
2. Apply a small amount of conductive silver composition to tip of drawing pen.
   Shake silver composition container before use.
3. Place ruler on glass along broken line. Deposit conductive silver composition on break with drawing pen. Slightly overlap existing heat wire on both sides [preferably 5 mm(0.20in)] of the break.

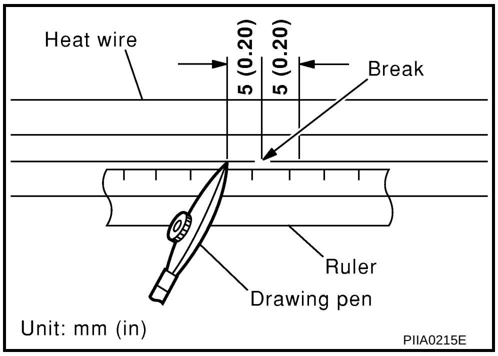

4. After repair has been completed, check repaired wire for continuity. This check should be performed 10 minutes after silver composition is deposited.
   Do not touch repaired area while test is being performed.

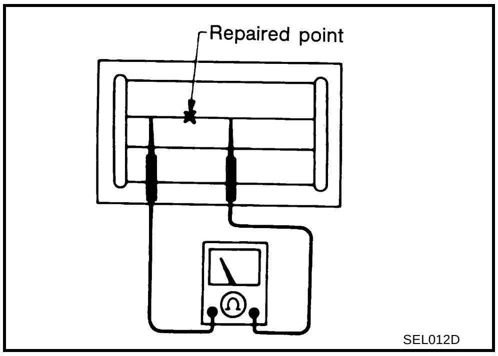

5. Apply a constant stream of hot air directly to the repaired area for approximately 20 minutes with a heat gun. A minimum distance of 3cm(1.2in) should be kept between repaired area and hot air outlet.
   If a heat gun is not available, let the repaired area dry for 24 hours.

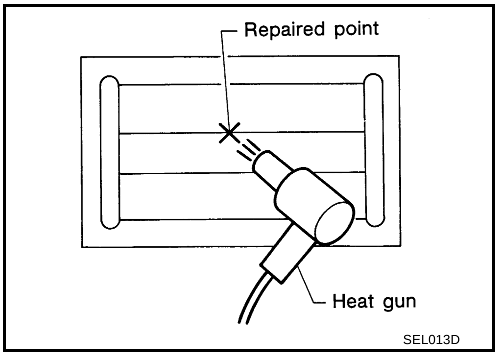

POWER WINDOW SYSTEM
PFP:25401

Component Parts and Harness Connector Location
AIS005QS

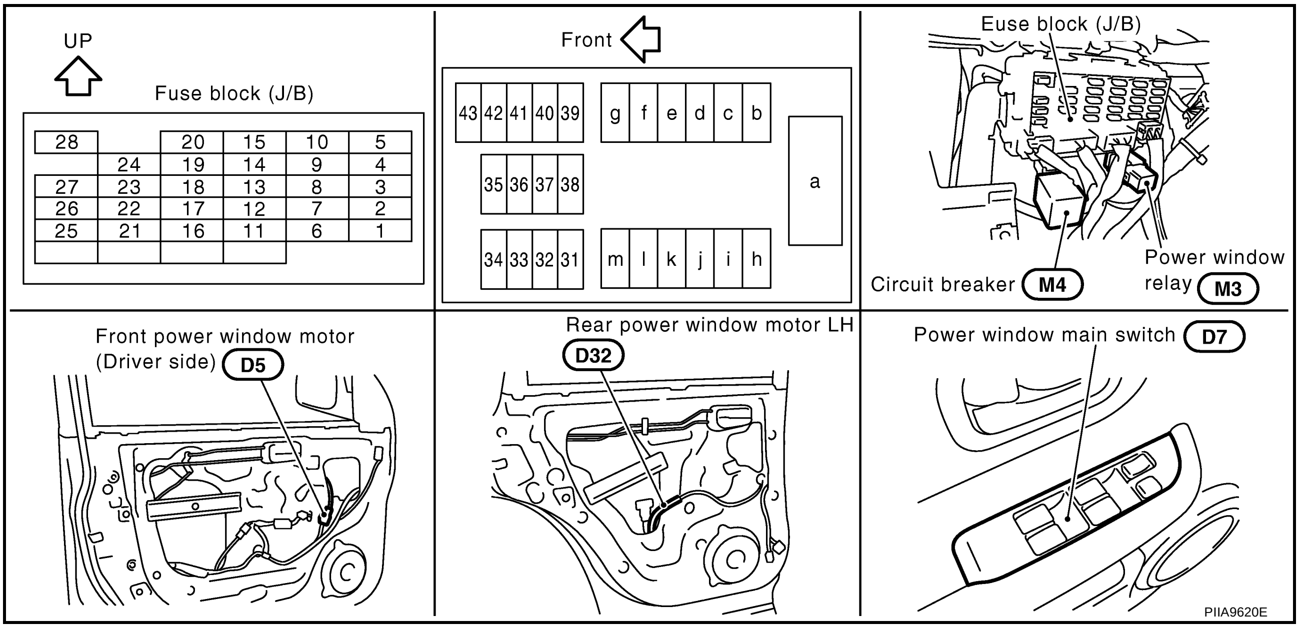

System Description
AIS005QT

Power is supplied at all times

- from 40A fusible link (letter **B** , located in the fuse and fusible link box)
- through circuit breaker terminal 1
- through circuit breaker terminal 2
- to power window relay terminal 3 and
- to power window main switch terminal 5.

With ignition switch in ON or START position, power is supplied

- through 10A fuse [No. 5, located in the fuse block (J/B)]
- to power window relay terminal 1

Ground is supplied

- to power window relay terminal 2
- through body grounds M27 and M70,
- to power window main switch terminal 19
- through body grounds M27 and M70.

When power and ground are supplied, the power window relay is energized and then power is supplied

- through power window relay terminal 5
- to power window main switch terminal 12,
- to front power window switch (passenger side) terminal 5,
- to rear power window switch LH and RH terminals 5.

A B C D E F G H GW J K L M

MANUAL OPERATION

Front Door (Driver Side)

WINDOW UP

When the driver side switch in the power window main switch is pressed in the up position,

Power is supplied

- through power window main switch terminal 2
- to front power window motor (driver side) terminal 1.

Ground is supplied

- to front power window motor (driver side) terminal 3
- through power window main switch terminal 1.

Then, the motor raises the window until the switch is released.

WINDOW DOWN

When the driver's window switch in the power window main switch is pressed in the down position,

Power is supplied

- through power window main switch terminal 1
- to front power window motor (driver side) terminal 3

Ground is supplied

- to front power window motor (driver side) terminal 1
- through power window main switch terminal 2.

Then, the motor lowers the window until the switch is released.

Front Door (Passenger Side)

POWER WINDOW MAIN SWITCH OPERATION

WINDOW UP

When the passenger side switch in the power window main switch is pressed in the up position,

Power is supplied

- through power window main switch terminal 4
- through front power window switch (passenger side) terminal 3
- through front power window switch (passenger side) terminal 1
- to front power window motor (passenger side) terminal 1.

Ground is supplied

- to front power window motor (passenger side) terminal 2
- through front power window switch (passenger side) terminal 2
- through front power window switch (passenger side) terminal 4
- through power window main switch terminal 3.

Then, the motor raises the window until the switch is released.

WINDOW DOWN

When the passenger side switch in the power window main switch is pressed in the down position,

Power is supplied

- through power window main switch terminal 3
- through front power window switch (passenger side) terminal 4
- through front power window switch (passenger side) terminal 2
- to front power window motor (passenger side) terminal 2.

Ground is supplied

- to front power window motor (passenger side) terminal 1
- through front power window switch (passenger side) terminal 1
- through front power window switch (passenger side) terminal 3
- through power window main switch terminal 4.

Then, the motor lowers the window until the switch is released.

FRONT POWER WINDOW SWITCH (PASSENGER SIDE) OPERATION

WINDOW UP

When the front power window switch (passenger side) is pressed in the up position,

Power is supplied

- through front power window switch (passenger side) terminal 1
- to front power window motor (passenger side) terminal 1

Ground is supplied

- to front power window motor (passenger side) terminal 2
- through front power window switch (passenger side) terminal 2
- through front power window switch (passenger side) terminal 4
- through power window main switch terminal 3.

Then, the motor raises the window until the switch is released.
WINDOW DOWN
When the front power window switch (passenger side) is pressed in the down position,
Power is supplied

- through front power window switch (passenger side) terminal 2
- to front power window motor (passenger side) terminal 2

Ground is supplied

- to front power window motor (passenger side) terminal 1
- through front power window switch (passenger side) terminal 1
- through front power window switch (passenger side) terminal 3
- through power window main switch terminal 4.

Then, the motor lowers the window until the switch is released.

Rear Door LH

POWER WINDOW MAIN SWITCH OPERATION
WINDOW UP
When the rear LH switch in the power window main switch is pressed in the up position,
Power is supplied

- through power window main switch terminal 14
- through rear power window switch LH terminal 3
- through rear power window switch LH terminal 1
- to rear power window motor LH terminal 1

Ground is supplied

- to rear power window motor LH terminal 2
- through rear power window switch LH terminal 2
- through rear power window switch LH terminal 4
- through power window main switch terminal 15.

Then, the motor raises the window until the switch is released.
WINDOW DOWN
When the rear LH switch in the power window main switch is pressed in the down position,
Power is supplied

- through power window main switch terminal 15
- through rear power window switch LH terminal 4
- through rear power window switch LH terminal 2
- to rear power window motor LH terminal 2.

Ground is supplied

- to rear power window motor LH terminal 1
- through rear power window switch LH terminal 1
- through rear power window switch LH terminal 3
- through power window main switch terminal 14.

Then, the motor lowers the window until the switch is released.
REAR POWER WINDOW SWITCH LH OPERATION
WINDOW UP
When the rear power window switch LH is pressed in the up position,

Power is supplied

- through rear power window switch LH terminal 1
- to rear power window motor LH terminal 1.

Ground is supplied

- to rear power window motor LH terminal 2
- through rear power window switch LH terminal 2
- through rear power window switch LH terminal 4
- through power window main switch terminal 15.

Then, the motor raises the window until the switch is released.
WINDOW DOWN
When the rear power window switch LH is pressed in the down position,
Power is supplied

- through rear power window switch LH terminal 2
- to rear power window motor LH terminal 2.

Ground is supplied

- to rear power window motor LH terminal 1
- through rear power window switch LH terminal 1
- through rear power window switch LH terminal 3
- through power window main switch terminal 14.

Then, the motor lowers the window until the switch is released.

Rear Door RH

POWER WINDOW MAIN SWITCH OPERATION
WINDOW UP
When the rear RH switch in the power window main switch is pressed in the up position,
Power is supplied

- through power window main switch terminal 10
- through rear power window switch RH terminal 3
- through rear power window switch RH terminal 1
- to rear power window motor RH terminal 1

Ground is supplied

- to rear power window motor RH terminal 2
- through rear power window switch RH terminal 2
- through rear power window switch RH terminal 4
- through power window main switch terminal 11.

Then, the motor raises the window until the switch is released.
WINDOW DOWN
When the rear RH switch in the power window main switch is pressed in the down position,
Power is supplied

- through power window main switch terminal 11
- through rear power window switch RH terminal 4
- through rear power window switch RH terminal 2
- to rear power window motor RH terminal 2

Ground is supplied

- to rear power window motor RH terminal 1
- through rear power window switch RH terminal 1
- through rear power window switch RH terminal 3
- through power window main switch terminal 10.

Then, the motor lowers the window until the switch is released.
REAR POWER WINDOW SWITCH LH OPERATION
WINDOW UP
When the rear power window switch RH is pressed in the up position,

Power is supplied

- through rear power window switch RH terminal 1
- to rear power window motor RH terminal 1.

Ground is supplied

- to rear power window motor RH terminal 2
- through rear power window switch RH terminal 2
- through rear power window switch RH terminal 4
- through power window main switch terminal 11.

Then, the motor raises the window until the switch is released.
WINDOW DOWN
When the rear power window switch RH is pressed in the down position,
Power is supplied

- through rear power window switch RH terminal 2
- to rear power window motor RH terminal 2.

Ground is supplied

- to rear power window motor RH terminal 1
- through rear power window switch RH terminal 1
- through rear power window switch RH terminal 3
- through power window main switch terminal 10.

Then, the motor lowers the window until the switch is released.

AUTO OPERATION

The power window AUTO feature enables the driver to open or close the driver's window without holding the window switch in the down or up position.
The AUTO feature operates on the driver's window.

POWER WINDOW LOCK

The power window lock is designed to lock operation of all windows except for driver's window.
When the lock switch is pressed to lock position, ground of the sub–switches in the power window main switch is disconnected. This prevents the power window motors from operating.

TIMER FUNCTION

With the timer function, driver power window can be operated for approximately 15 minutes after ignition switch is turned OFF (positions other than ON). However, the timer will be cancel when a specific signal, such as driver door close (door switch OFF) → open (door switch ON), or ignition switch OFF → ON, is input.

DRIVER WINDOW ANTI–PINCH FUNCTION

During raising operation of driver power window, if power window main switch detects that foreign object is pinched, power window lowers approximately 150 mm (5.91 in).

NOTE:
Depending on environment and driving conditions, if a similar impact or load is applied to power window, it may lower.

Operation Conditions

- Driver door window is between fully-open and just before fully-closed position (when the limit switch is ON).
- During automatic operation when ignition switch is turned ON.
- During automatic or manual operation when ignition switch is other than ON position (when the timer operates).

Schematic

AIS005QU

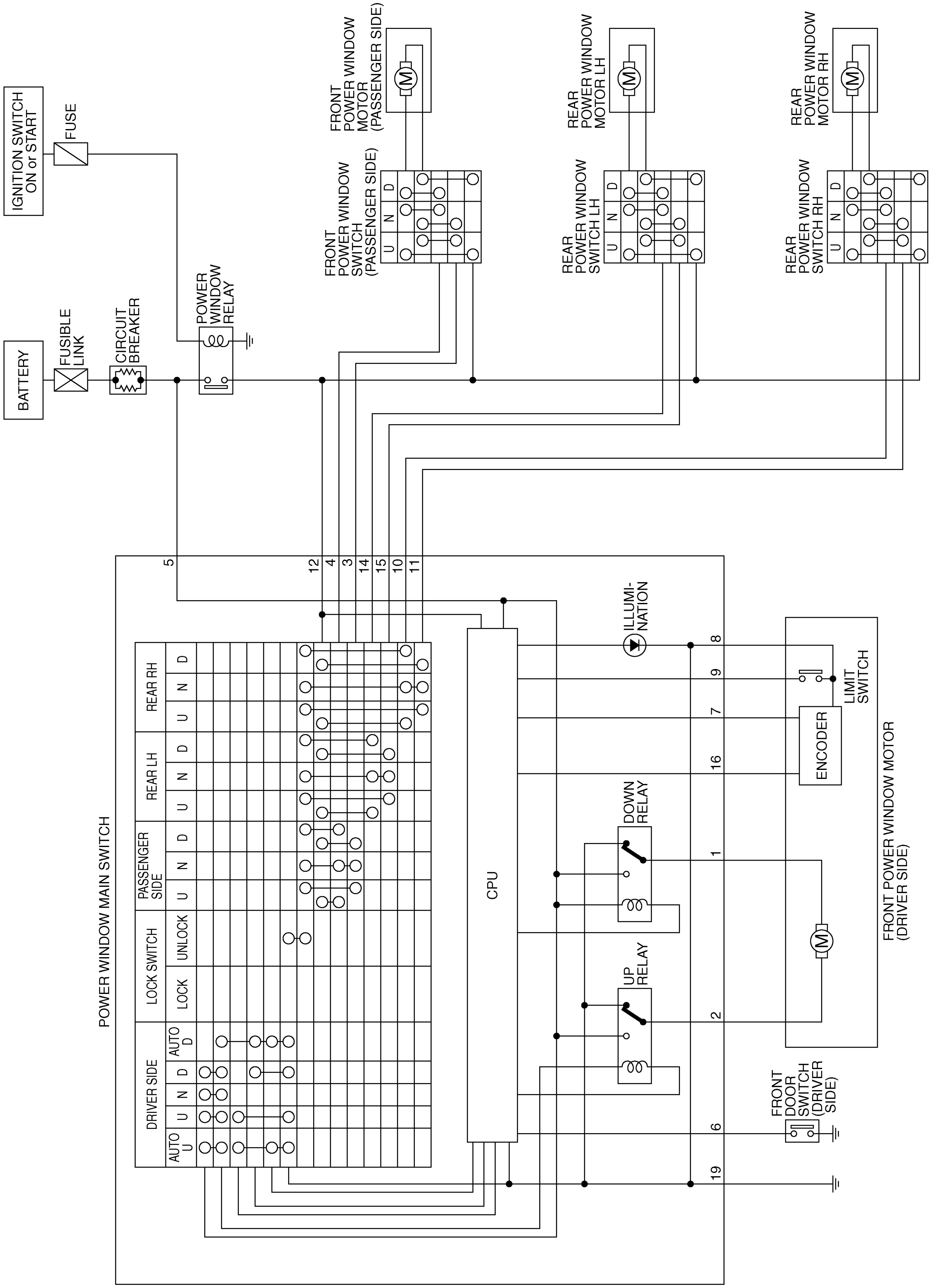

Wiring Diagram – WINDOW –

AIS005QV

GW-WINDOW-01

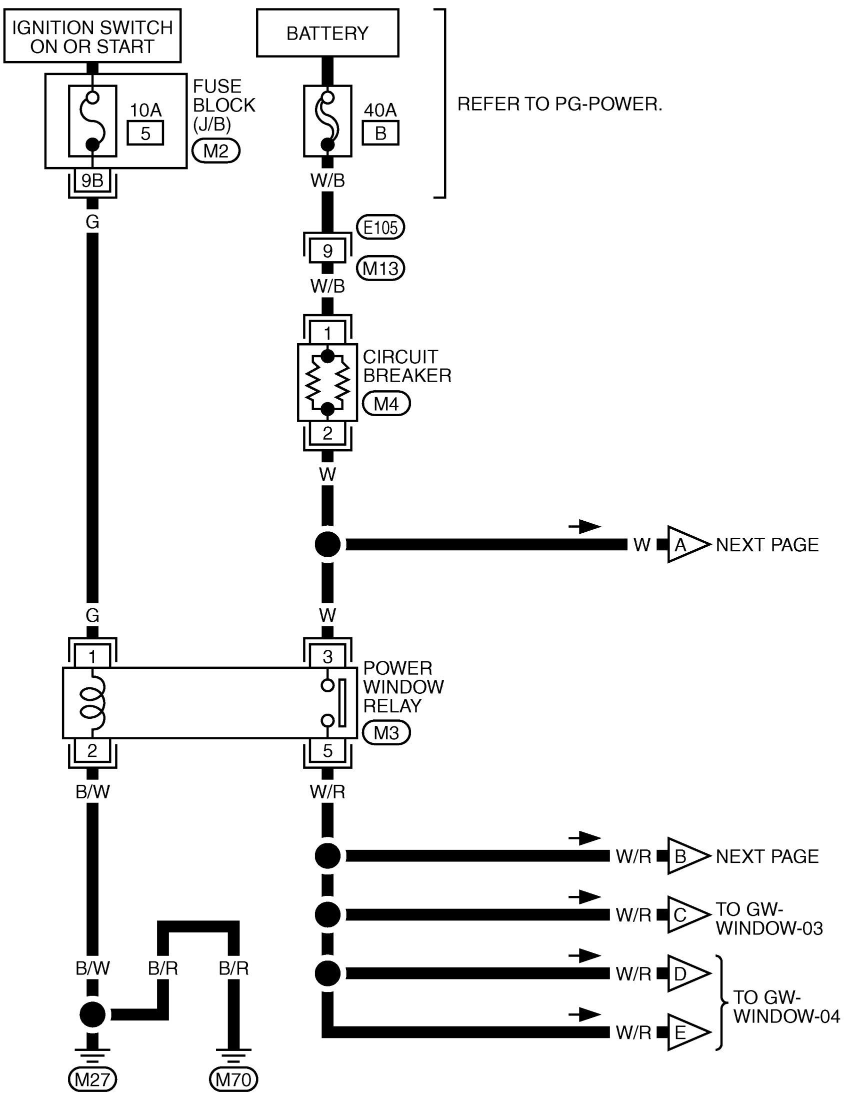

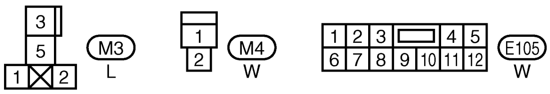

REFER TO THE FOLLOWING.
M2 -FUSE BLOCK-JUNCTION BOX (J/B)

TIWA0449E

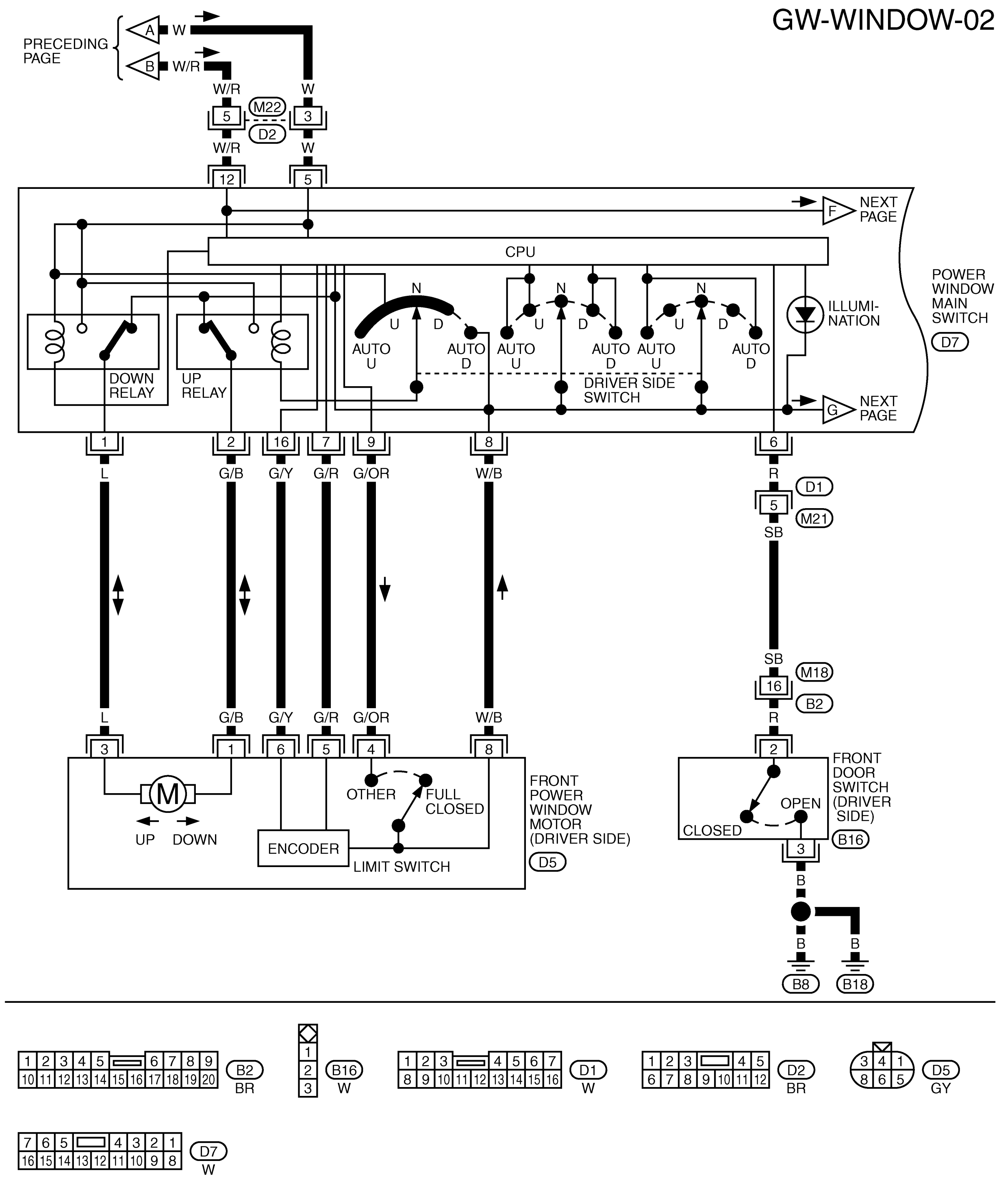
GW-WINDOW-02
PRECEDING PAGE
A W
B W/R
W/R
W
M22
D2
5
3
12
5
NEXT PAGE
F
CPU
N
U
D
AUTO U
AUTO D
ILLUMI-NATION
POWER WINDOW MAIN SWITCH
D7
DOWN RELAY
UP RELAY
DRIVER SIDE SWITCH
NEXT PAGE
G
1
2
16
7
9
8
6
L
G/B
G/Y
G/R
G/OR
W/B
R
D1
5
M21
SB
M18
16
B2
3
1
6
5
4
8
2
M
UP
DOWN
OTHER
FULL CLOSED
ENCODER
LIMIT SWITCH
FRONT POWER WINDOW MOTOR (DRIVER SIDE)
D5
FRONT DOOR SWITCH (DRIVER SIDE)
B16
OPEN
CLOSED
B
B8
B18
B2 BR
B16 W
D1 W
D2 BR
D5 GY
D7 W
TIWB0063E

GW-WINDOW-03

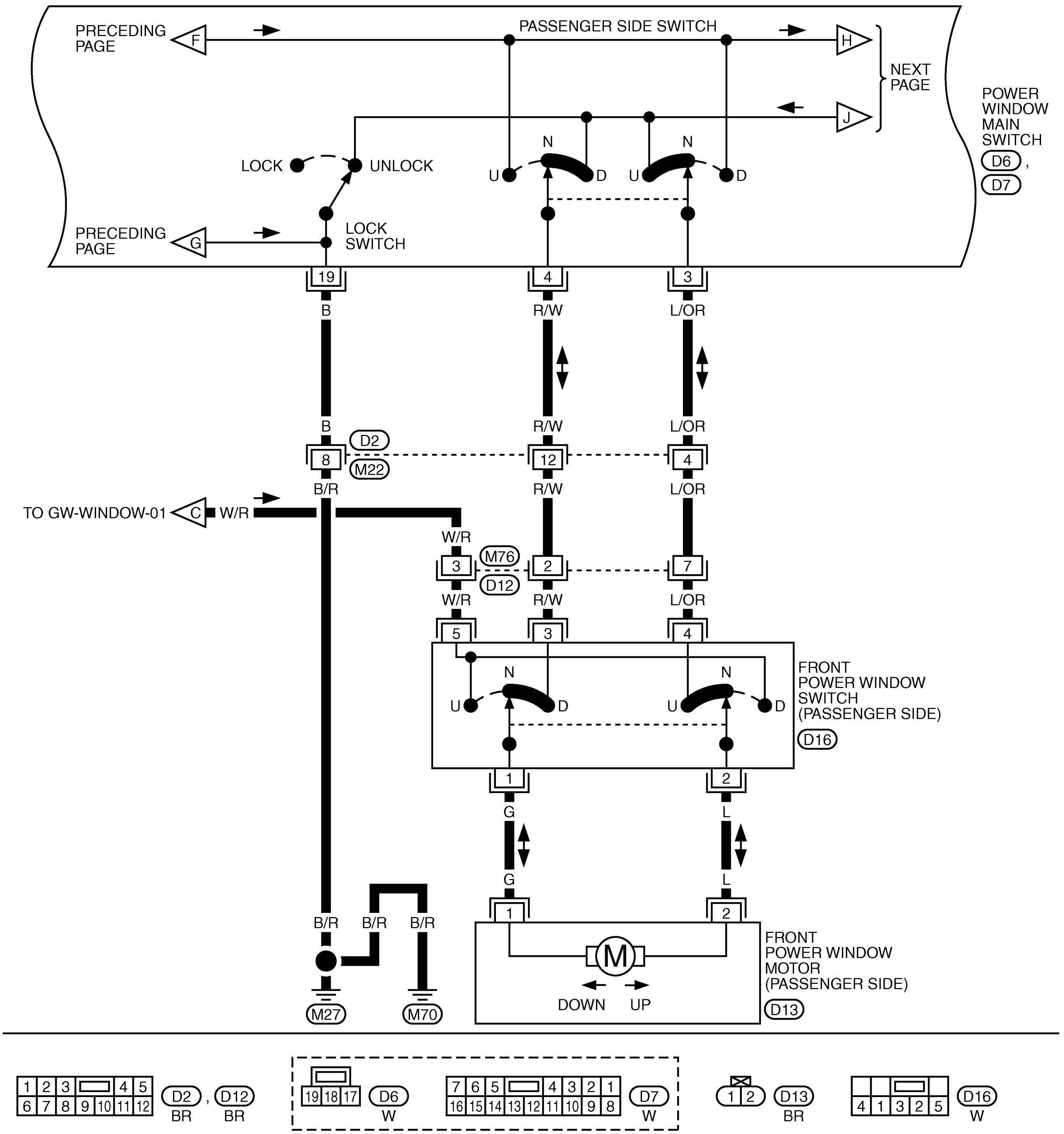

TIWB0064E

A
B
C
D
E
F
G
H
GW
J
K
L
M

GW-WINDOW-04

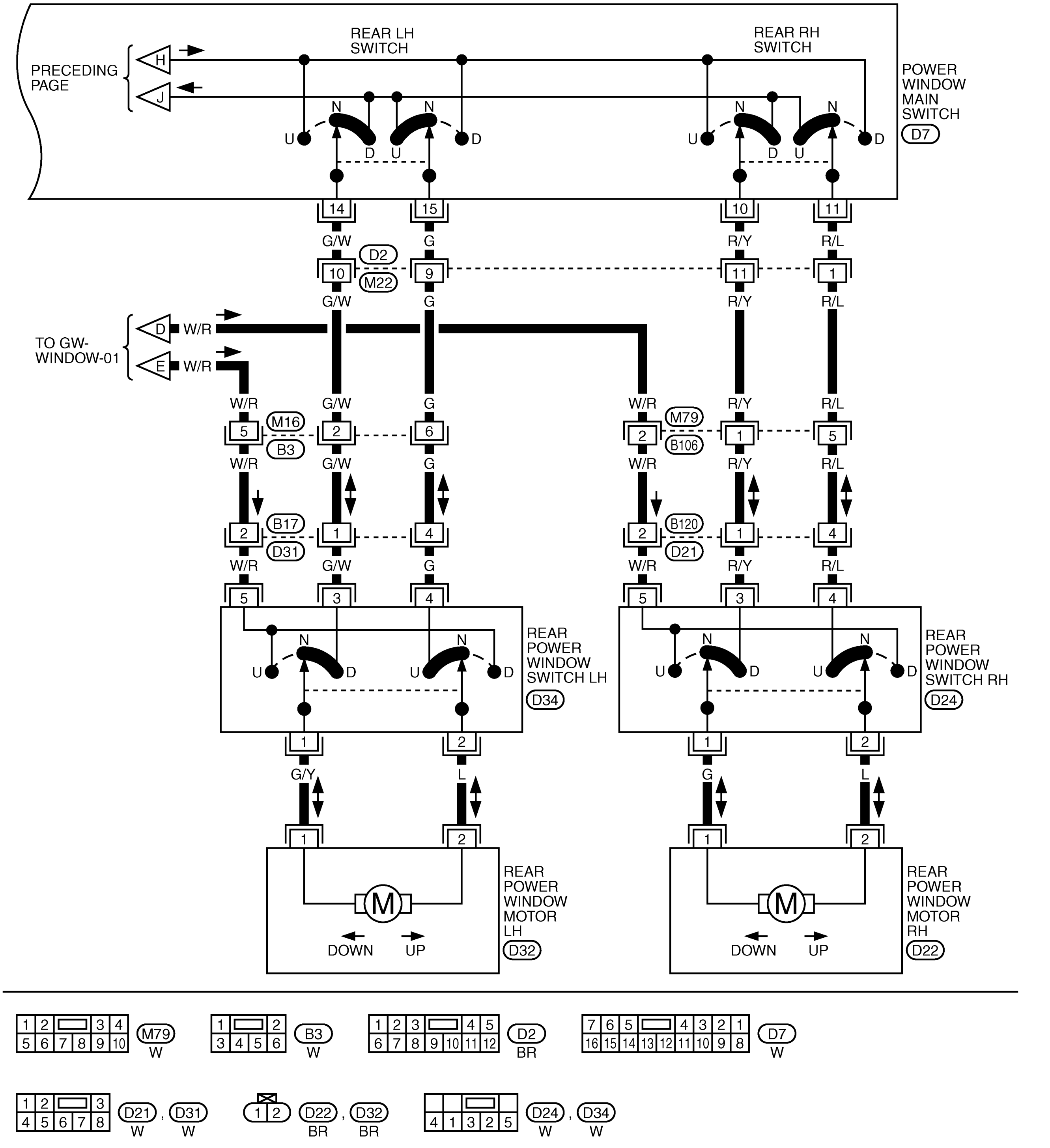
REAR LH SWITCH
REAR RH SWITCH
PRECEDING PAGE
H
J
POWER WINDOW MAIN SWITCH
D7
N
U
D
14
15
10
11
G/W
G
R/Y
R/L
D2
M22
9
1
TO GW-WINDOW-01
D
E
W/R
M16
B3
5
2
6
M79
B106
B17
D31
4
B120
D21
3
REAR POWER WINDOW SWITCH LH
D34
REAR POWER WINDOW SWITCH RH
D24
G/Y
L
REAR POWER WINDOW MOTOR LH
D32
REAR POWER WINDOW MOTOR RH
D22
M
DOWN
UP
W
BR
TIWA0452E

Terminal and Reference Value for Power Window Main Switch

AIS005QW

TERMINAL	WIRE COLOR	ITEM	CONDITION	VOLTAGE (V) (Approx.)
1	L	Driver side power window motor DOWN signal	When power window motor is DOWN at operated.	Battery voltage
			Other than above.	0
2	G/B	Driver side power window motor UP signal	When power window motor is UP at operated.	Battery voltage
			Other than above.	0
3	L/OR	Passenger side power window motor DOWN signal	When passenger switch in power window main switch is DOWN at operated.	Battery voltage
			Other than above.	0
4	R/W	Passenger side power window motor UP signal	When passenger switch in power window main switch is UP at operated.	Battery voltage
			Other than above.	0
5	W	Power source (fusible link)	—	Battery voltage
6	R	Driver side door switch signal	ON (open)	0
			OFF (close)	Battery voltage
7	G/R	Encoder power supply	Ignition switch position ON and timer operating	10
8	W/B	Limit switch and encoder ground	—	0
9	G/OR	Limit switch signal	Driver side door window is between fully-open and just before fully-closed position (ON).	0
			Driver side door window is between just before fully-closed position and fully-closed position (OFF).	5
10	R/Y	Rear RH side power window motor UP signal	When rear RH switch in power window main switch is UP at operated.	Battery voltage
			Other than above.	0
11	R/L	Rear RH side power window motor DOWN signal	When rear RH switch in power window main switch is DOWN at operated.	Battery voltage
			Other than above.	0
12	W/R	Power window relay	Ignition switch position (ON or START)	Battery voltage
14	G/W	Rear LH side power window motor UP signal	When rear LH switch in power window main switch is UP at operated.	Battery voltage
			Other than above.	0
15	G	Rear LH side power window motor DOWN signal	When rear LH switch in power window main switch is DOWN at operated.	Battery voltage
			Other than above.	0

TERMINAL	WIRE COLOR	ITEM	CONDITION	VOLTAGE (V) (Approx.)
16	G/Y	Encoder pulse signal	When power window motor operates.	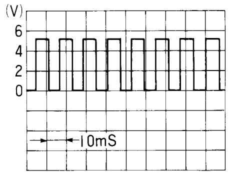 OCC3383D
19	B	Ground	—	0

Trouble Diagnoses Symptom Chart

AIS005R0

Make sure other systems using the signal of the following systems operate normally.

Symptom	Repair order	Refer to page
None of the power window can be operated using by any switch	1. Check power window relay power supply and ground	GW-45
	2. Check power window main switch power supply and ground circuit	GW-46
Driver side power window does not operate.	1. Check power window motor (driver side) circuit	GW-46
Passenger side power window does not operate.	1. Check power window motor circuit	GW-47
	2. Check power window switch circuit	GW-48
	3. Check power window (passenger side) circuit	GW-49
Rear LH power window does not operate.	1. Check power window motor circuit	GW-47
	2. Check power window switch circuit	GW-48
	3. Check power window (rear LH) circuit	GW-49
Rear RH power window does not operate.	1. Check power window motor circuit	GW-47
	2. Check power window switch circuit	GW-48
	3. Check power window (rear RH) circuit	GW-50
Anti-pinch system does not operate normally (driver side)	1. Door window sliding part malfunction ● A foreign adheres to window glass or glass run rubber ● Glass run rubber wear or deformation. ● Sash is tilted to much, or no enough.	—
	2. Limit switch adjusting	GW-58
	3. Check limit switch circuit	GW-51
	4. Check encoder circuit	GW-52
Auto operation does not operate but manual operate normally	1. Check encoder circuit	GW-52
Power window retained power operation does not operate properly	1. Check door switch circuit	GW-54

Check Power Window Relay Power Supply and Ground Circuit

AIS005R1

1. CHECK FUSE

- Check 10A fuse [No. 5, located in fuse block (J/B)]
- Check 40A fusible link (litter **B** , located in the fuse and fusible link box.)

NOTE:
Refer to GW-33, "Component Parts and Harness Connector Location" .

OK or NG

OK >> GO TO 2.
NG >> If fuse is blown out, be sure to eliminate cause of malfunction before installing new fuse. Refer to PG-2, "POWER SUPPLY ROUTING" .

2. CHECK POWER WINDOW RELAY POWER SUPPLY

1. Turn ignition switch OFF.
2. Remove power window relay.
3. Turn ignition switch ON.
4. Check voltage between power window relay harness connector M3 terminal 1, 3 and ground.

1 (G) - Ground : Battery voltage
3 (W) - Ground : Battery voltage

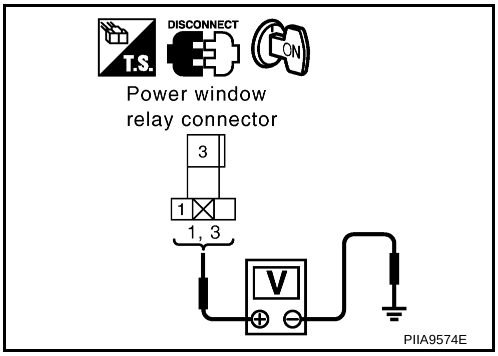

OK or NG

OK >> GO TO 3.
NG >> Check power window relay power supply circuit for open or short.

3. CHECK POWER WINDOW RELAY GROUND

1. Turn ignition switch OFF.
2. Check continuity between power window relay harness connector M3 terminal 2 and ground.

2 (B/W) - Ground : Continuity should exist.

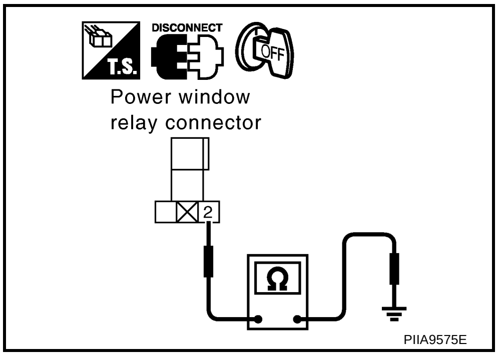

OK or NG

OK >> GO TO 4.
NG >> Check power window relay ground circuit for open or short.

4. CHECK POWER WINDOW RELAY

Check continuity between power window relay terminal 3 and 5.

Terminal		Condition	Continuity
3	5	12V direct current supply between terminals 1 and 2	Yes
		No current supply	No

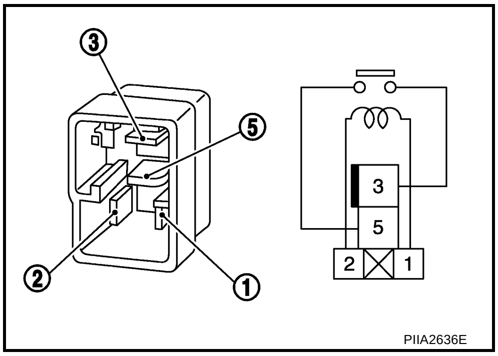

OK or NG

OK >> Check condition of harness and connector.
NG >> Replace power window relay.

Check Power Window Main Switch Power Supply and Ground Circuit

AIS005R2

1. CHECK POWER SUPPLY CIRCUIT

1. Turn ignition switch ON.
2. Check voltage between power window main switch harness connector D7 terminal 5, 12 and ground.

5 (W) - Ground : Battery voltage
12 (W/R) - Ground : Battery voltage

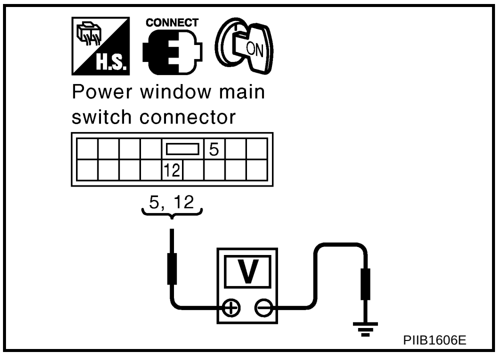

OK or NG

OK >> GO TO 2.
NG >> Repair or replace harness between power window main switch power supply circuit.

2. CHECK POWER WINDOW MAIN SWITCH GROUND CIRCUIT

1. Turn ignition switch OFF.
2. Disconnect power window main switch harness connector.
3. Check continuity between power window main switch harness connector D6 terminal 19 and ground.

19 (B) - Ground : Continuity should exist.

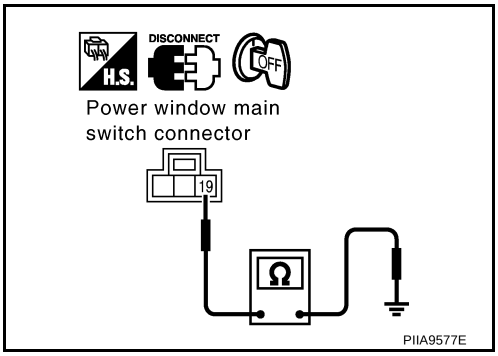

OK or NG

OK >> Power window main switch power supply and ground circuit are OK.
NG >> Repair or replace harness between power window main switch and ground.

Check Power Window Motor (Driver Side) Circuit

AIS005R3

1. CHECK POWER WINDOW MAIN SWITCH SIGNAL

1. Turn ignition switch ON.
2. Driver side switch in power window main switch operated, check voltage between power window main switch harness connector and ground.

Connector	Terminal (Wire color)		Condition	Voltage (V) (Approx.)
	(+)	(-)		
D7	1 (L)	Ground	Closing	0
			Opening	Battery voltage
	2 (G/B)		Closing	Battery voltage
			Opening	0

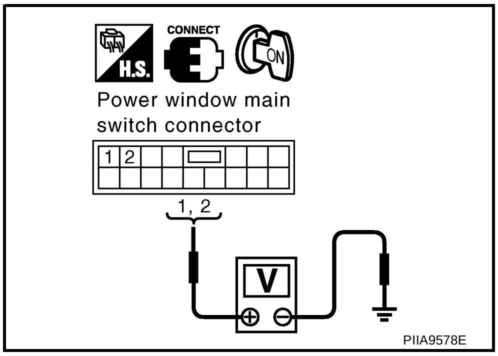

OK or NG

OK >> GO TO 2.
NG >> Replace power window main switch.

2. CHECK POWER WINDOW MOTOR CIRCUIT

1. Turn ignition switch OFF.
2. Disconnect power window main switch and front power window motor (driver side) connector.
3. Check continuity between power window main switch harness connector D7 terminal 1, 2 and front power window motor (driver side) harness connector D5 terminal 1, 3.

1 (L) - 3 (L) : Continuity should exist.
2 (G/B) - 1 (G/B) : Continuity should exist.

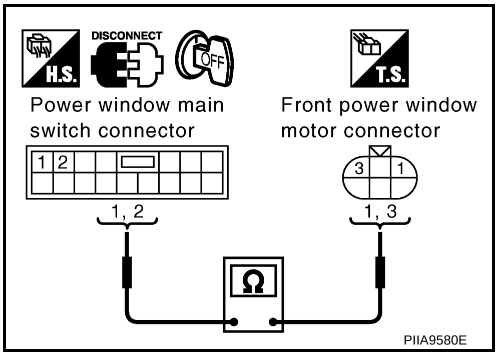

OK or NG

OK >> Replace front power window motor (driver side).
NG >> Repair or replace harness between power window main switch and front power window motor (driver side).

Check Power Window Motor Circuit

AIS005R4

1. CHECK POWER WINDOW SWITCH SIGNAL

1. Turn ignition switch ON.
2. Power window switch operated, check voltage between power window switch harness connector and ground.

Connector	Terminal (Wire color) (+)	Terminal (Wire color) (-)	Condition	Voltage (V) (Approx.)
D16 (Passenger side)	1 (G or G/Y)	Ground	Closing	Battery voltage
			Opening	0
D24 (Rear RH)	2 (L)		Closing	0
D34 (Rear LH)			Opening	Battery voltage

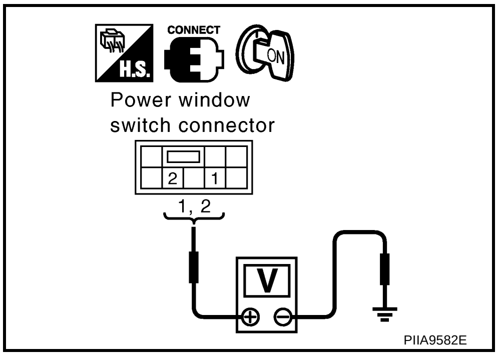

OK or NG

OK >> GO TO 2.
NG >> Check power window switch. Refer to GW-48 .

2. CHECK POWER WINDOW MOTOR CIRCUIT

1. Turn ignition switch OFF.
2. Disconnect power window switch and power window motor connector.
3. Check continuity between power window switch harness connector D16 (passenger side), D24 (rear RH), D34 (rear LH) terminal 1, 2 and power window motor harness connector D13 (passenger side), D 22 (rear RH), D32 (rear LH) terminal 1, 2.

1 (G or G/Y) - 1 (G or G/Y) : Continuity should exist.
2 (L) - 2 (L) : Continuity should exist.

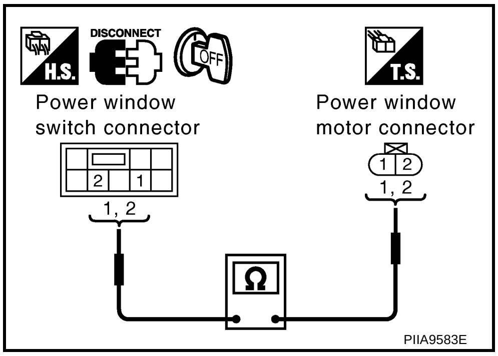

OK or NG

OK >> Replace malfunction power window motor.
NG >> Repair or replace harness between power window switch and power window motor.

Check Power Window Switch Circuit

AIS005R5

1. CHECK POWER WINDOW SWITCH POWER SUPPLY

1. Turn ignition switch ON.
2. Check voltage between power window switch harness connector D16 (passenger side), D24 (rear RH), D34 (rear LH) terminal 5 and ground.

5 (W/R) - Ground : Battery voltage

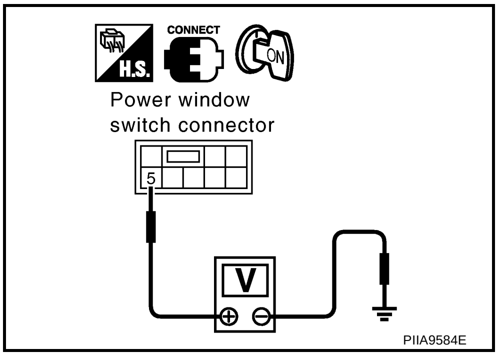

PIIA9584E

OK or NG

OK >> GO TO 3.
NG >> GO TO 2.

2. CHECK POWER WINDOW SWITCH POWER SUPPLY CIRCUIT

1. Turn ignition switch OFF.
2. Disconnect power window switch connector and power window relay.
3. Check continuity between power window switch harness connector D16 (passenger side), D24 (rear RH), D34 (rear LH) terminal 5 and power window relay harness connector M3 terminal 5.

5 (W/R) - 5 (W/R) : Continuity should exist.

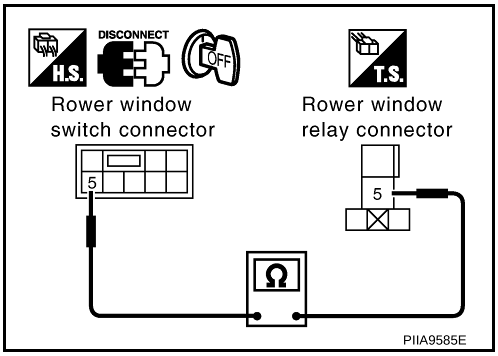

PIIA9585E

OK or NG

OK >> Check condition of harness and connector.
NG >> Repair or replace harness between power window switch and power window relay.

3. CHECK POWER WINDOW SWITCH

1. Turn ignition switch OFF.
2. Disconnect power window switch connector.
3. Power window switch operated, check continuity between power window switch connector D16 (passenger side), D24 (rear RH), D34 (rear LH) terminal 1, 2 and 5.

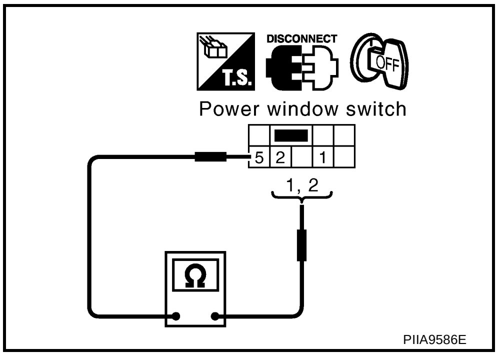

PIIA9586E

Terminal		Condition	Continuity
1	5	UP	Yes
2		DOWN	Yes

OK or NG

OK >> Power window switch is OK.
NG >> Replace malfunction power window switch.

Check Power Window (Passenger Side) Circuit

AIS005R6

1. CHECK POWER WINDOW MAIN SWITCH OUTPUT SIGNAL

1. Turn ignition switch ON.
2. Passenger side switch in power window main switch operated, check voltage between power window main switch harness connector and ground.

Connector	Terminal (Wire color)		Condition	Voltage (V) (Approx.)
	(+)	(-)		
D7	3 (L/OR)	Ground	Closing	0
			Opening	Battery voltage
	4 (R/W)		Closing	Battery voltage
			Opening	0

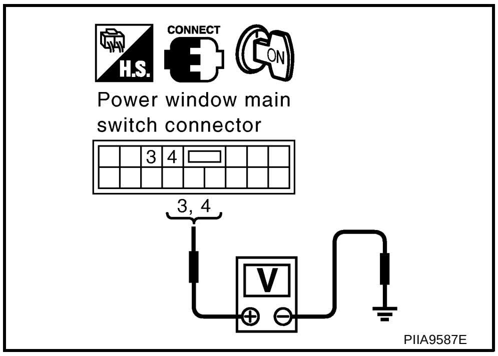

OK or NG

OK >> GO TO 2.
NG >> Replace power window main switch.

2. CHECK POWER WINDOW SWITCH CIRCUIT

1. Turn ignition switch OFF.
2. Disconnect power window main switch and font power window switch (passenger side) connector.
3. Check continuity between power window main switch harness connector D7 terminal 3, 4 and front power window switch (passenger side) harness connector D16 terminal 3, 4.

3 (L/OR) - 4 (L/OR) : Continuity should exist.
4 (R/W) - 3 (R/W) : Continuity should exist.

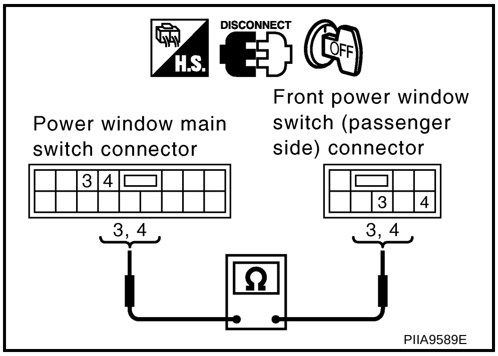

OK or NG

OK >> Check condition of harness and connector.
NG >> Repair or replace harness between power window main switch and front power window switch (passenger side).

Check Power Window (Rear LH) Circuit

AIS005R7

1. CHECK POWER WINDOW MAIN SWITCH OUTPUT SIGNAL

1. Turn ignition switch ON.
2. Rear LH switch in power window main switch operated, check voltage between power window main switch harness connector and ground.

Connector	Terminal (Wire color)		Condition	Voltage (V) (Approx.)
	(+)	(-)		
D7	14 (G/W)	Ground	Closing	Battery voltage
			Opening	0
	15 (G)		Closing	0
			Opening	Battery voltage

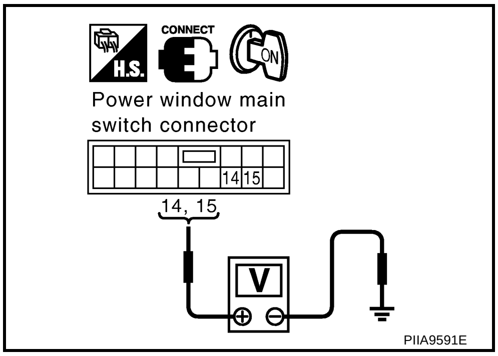

OK or NG

OK >> GO TO 2.
NG >> Replace power window main switch.

2. CHECK POWER WINDOW SWITCH CIRCUIT

1. Turn ignition switch OFF.
2. Disconnect power window main switch and rear power window switch LH connector.
3. Check continuity between power window main switch harness connector D7 terminal 14, 15 and rear power window switch LH harness connector D34 terminal 3, 4.

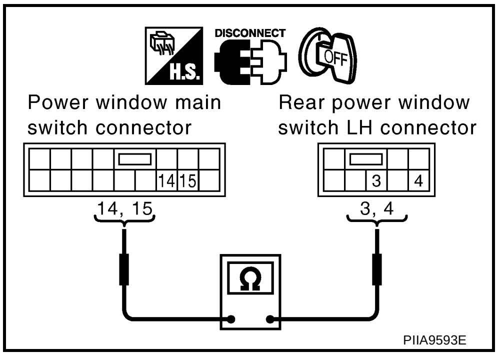

PIIA9593E

14 (G/W) - 3 (G/W) : Continuity should exist.
15 (G) - 4 (G) : Continuity should exist.

OK or NG

OK >> Check condition of harness and connector.
NG >> Repair or replace harness between power window main switch and rear power window switch LH.

Check Power Window (Rear RH) Circuit

AIS005R8

1. CHECK POWER WINDOW MAIN SWITCH OUTPUT SIGNAL

1. Turn ignition switch ON.
2. Rear RH switch in power window main switch operated, check voltage between power window main switch harness connector and ground.

Connector	Terminal (Wire color)		Condition	Voltage (V) (Approx.)
	(+)	(-)		
D7	10 (R/Y)	Ground	Closing	Battery voltage
			Opening	0
	11 (R/L)		Closing	0
			Opening	Battery voltage

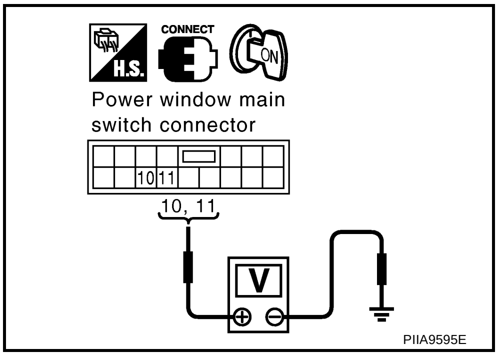

PIIA9595E

OK or NG

OK >> GO TO 2.
NG >> Replace power window main switch.

2. CHECK POWER WINDOW SWITCH CIRCUIT

1. Turn ignition switch OFF.
2. Disconnect power window main switch and rear power window switch LH connector.
3. Check continuity between power window main switch harness connector D7 terminal 10, 11 and rear power window switch RH harness connector D24 terminal 3, 4.

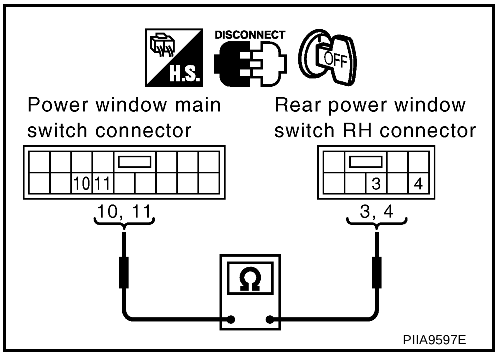

PIIA9597E

10 (R/Y) - 3 (R/Y) : Continuity should exist.
11 (R/L) - 4 (R/L) : Continuity should exist.

OK or NG

OK >> Check condition of harness and connector.
NG >> Repair or replace harness between power window main switch and rear power window switch RH.

Check Limit Switch Circuit

AIS005R9

1. CHECK LIMIT SWITCH SIGNAL

1. Turn ignition switch ON.
2. Check voltage between power window main switch harness connector and ground.

Connector	Terminal (Wire color) (+)	Terminal (Wire color) (-)	Condition	Voltage (V) (Approx.)
D7	9 (G/OR)	Ground	Driver side door window is Between fully-open and Just before fully-closed Position (ON)	0
			Driver side door window is Between just before fully-Closed position and fully-Closed position (OFF)	5

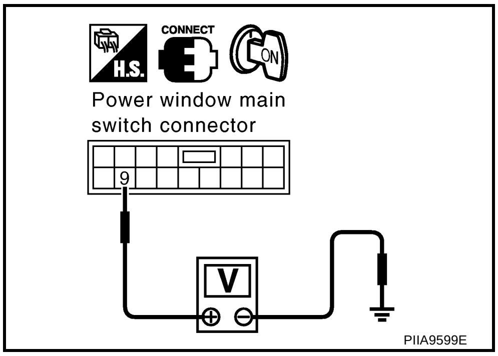

OK or NG

OK >> Limit switch is OK.
NG >> GO TO 2.

2. CHECK LIMIT SWITCH GROUND CIRCUIT

1. Turn ignition switch OFF.
2. Disconnect front power window motor (driver side) connector.
3. Check continuity between front power window motor (driver side) harness connector D5 terminal 8 and ground.

8 (W/B) - Ground : Continuity should exist.

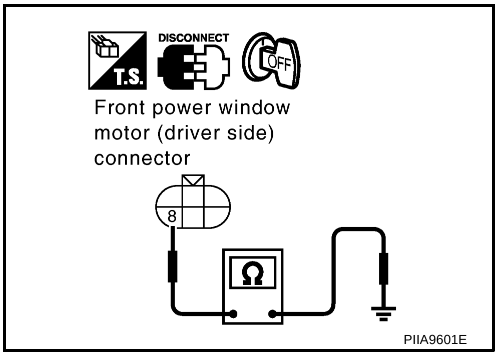

OK or NG

OK >> GO TO 4.
NG >> GO TO 3.

3. CHECK HARNESS CONTINUITY

1. Disconnect power window main switch connector.
2. Check continuity between power window main switch harness connector D7 terminal 8 and front power window motor (driver side) harness connector D5 terminal 8.

8 (W/B) - 8 (W/B) : Continuity should exist.

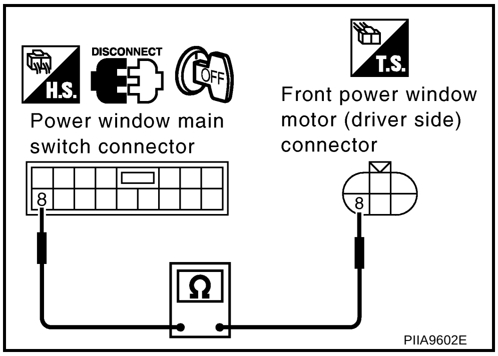

OK or NG

OK >> Replace power window main switch.
NG >> Repair or replace harness between power window main switch and front power window motor (driver side).

4. CHECK POWER WINDOW MAIN SWITCH OUTPUT SIGNAL

1. Turn ignition switch ON.
2. Check voltage between power window main switch harness connector D7 terminal 9 and ground.

9 (G/OR) - Ground : Approx. 5V

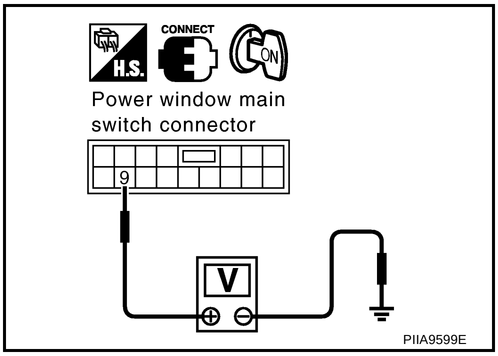

OK or NG

OK >> GO TO 5.
NG >> Replace power window main switch.

5. CHECK HARNESS CONTINUITY

1. Turn ignition switch OFF.
2. Disconnect power window main switch connector.
3. Check continuity between power window main switch harness connector D7 terminal 9 and front power window motor (driver side) harness connector D5 terminal 4.

9 (G/OR) - 4 (G/OR) : Continuity should exist.

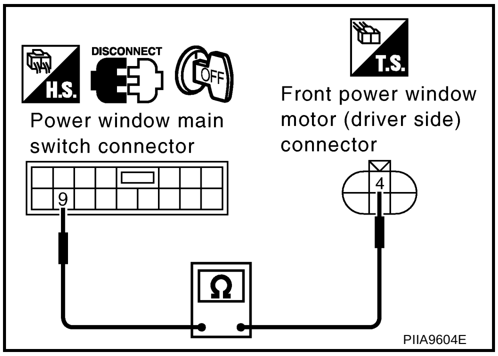

OK or NG

OK >> Check condition of harness and connector.
NG >> Replace power window motor (driver side).

Check Encoder Circuit

AIS005RA

1. CHECK ENCODER POWER SUPPLY

1. Turn ignition switch OFF.
2. Disconnect front power window motor (driver side) connector.
3. Turn ignition switch ON.
4. Check voltage between front power window motor (driver side) harness connector D5 terminal 5 and ground.

5 (G/R) - Ground : Approx. 10V

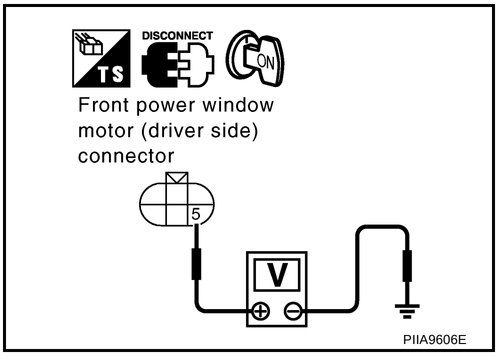

OK or NG

OK >> GO TO 3.
NG >> GO TO 2.

2. CHECK HARNESS CONTINUITY

1. Turn ignition switch OFF.
2. Disconnect power window main switch connector.
3. Check continuity between power window main switch harness connector D7 terminal 7 and front power window motor (driver side) harness connector D5 terminal 5.

7 (G/R) - 5 (G/R) : Continuity should exist.

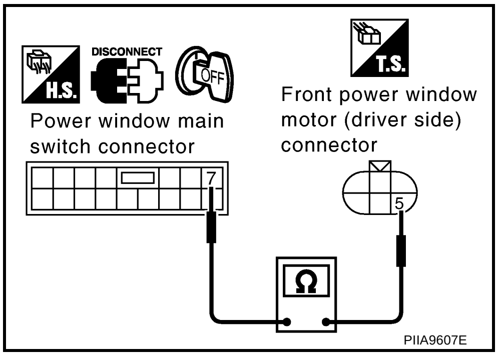

OK or NG

OK >> Replace power window main switch.
NG >> Repair or replace harness between power window main switch and front power window motor (driver side).

3. CHECK ENCODER GROUND

1. Turn ignition switch OFF.
2. Check continuity between front power window motor (driver side) harness connector D5 terminal 8 and ground.

8 (W/B) - Ground : Continuity should exist.

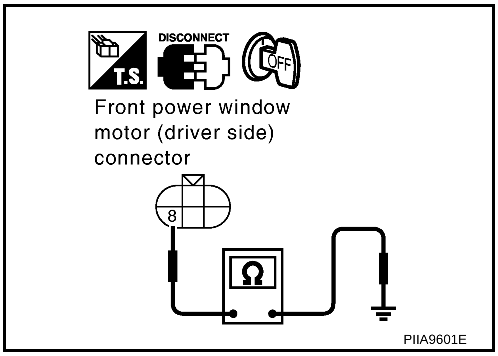

OK or NG

OK >> GO TO 5.
NG >> GO TO 4.

4. CHECK ENCODER GROUND CIRCUIT

1. Disconnect power window main switch connector.
2. Check continuity between power window main switch harness connector D7 terminal 8 and front power window motor (driver side) harness connector D5 terminal 8.

8 (W/B) - 8 (W/B) : Continuity should exist.

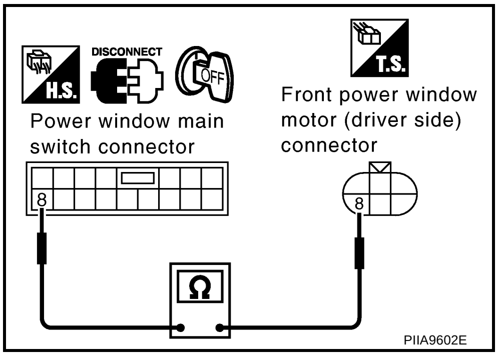

OK or NG

OK >> Replace power window main switch.
NG >> Repair or replace harness between power window main switch and front power window motor (driver side).

5. CHECK ENCODER SIGNAL

1. Connect front power window motor (driver side) connector.
2. Turn ignition switch ON.
3. Check signal between power window main switch connector and ground with oscilloscope.

Connector	Terminal (Wire color)		Condition	Signal (Reference value)
	(+)	(-)		
D7	16 (G/Y)	Ground	opening	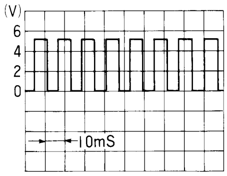 OCC3383D

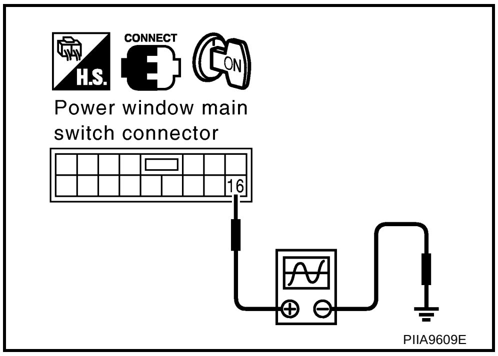

PIIA9609E

OK or NG

OK >> Replace power window main switch.
NG >> GO TO 6.

6. CHECK ENCODER CIRCUIT

1. Turn ignition switch OFF.
2. Disconnect power window main switch and front power window motor (driver side) connector.
3. Check continuity between power window main switch harness connector D7 terminal 16 and front power window motor (driver side) harness connector D5 terminal 6.

16 (G/Y) - 6 (G/Y) : Continuity should exist.

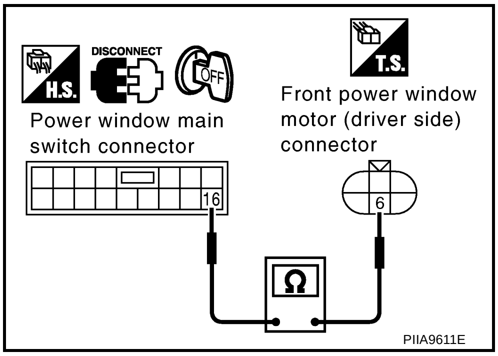

PIIA9611E

OK or NG

OK >> Replace front power window motor (driver side).
NG >> Repair or replace harness between power window main switch and front power window motor (driver side).

Check Door Switch Circuit

AIS005RB

1. CHECK DOOR SWITCH INPUT SIGNAL

Check voltage between power window main switch harness connector and ground.

Connector	Terminal (Wire color)		Condition	Voltage (V) (Approx.)
	(+)	(-)		
D7	6 (R)	Ground	OPEN	0
			CLOSE	Battery voltage

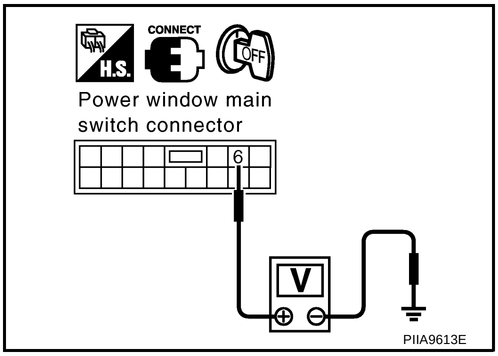

PIIA9613E

OK or NG

OK >> Replace power window main switch.
NG >> GO TO 2.

2. CHECK DOOR SWITCH CIRCUIT

1. Turn ignition switch OFF.
2. Disconnect power window main switch and front door switch (driver side) connector.
3. Check continuity between power window main switch harness connector D7 terminal 6 and front door switch (driver side) harness connector B16 terminal 2.

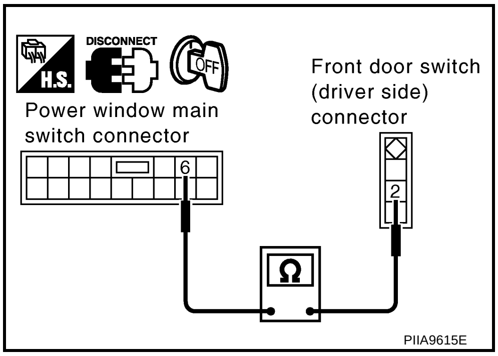

6 (R) - 2 (R) : Continuity should exist.

OK or NG

OK >> GO TO 3.
NG >> Repair or replace harness between power window main switch and front door switch (driver side).

3. CHECK DOOR SWITCH GROUND CIRCUIT

Check continuity between front door switch (driver side) harness connector B16 terminal 3 and ground.

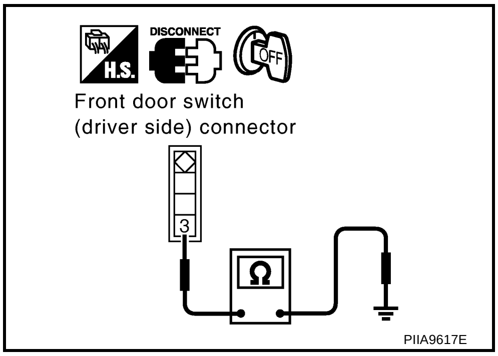

3 (B) - Ground : Continuity should exist.

OK or NG

OK >> GO TO 4.
NG >> Repair or replace harness between front door switch (driver side) and ground.

4. CHECK DOOR SWITCH

Check continuity between front door switch (driver side) terminal 2 and 3.

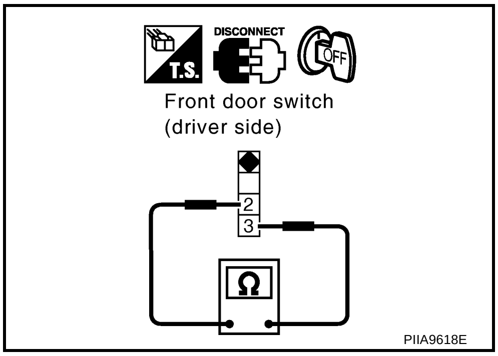

Terminal		Door switch	Continuity
2	3	Pushed	No
		Released	Yes

OK or NG

OK >> GO TO 5.
NG >> Replace front door switch (driver side).

5. CHECK POWER WINDOW MAIN SWITCH OUTPUT SIGNAL

1. Connect power window main switch connector.
2. Check voltage between power window main switch harness connector D7 terminal 6 and ground.

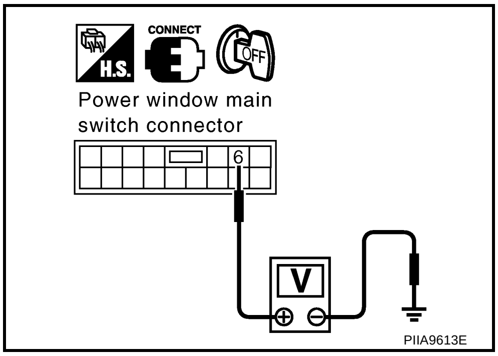

6 (R) - Ground : Battery voltage

OK or NG

OK >> Check condition of harness and connector.
NG >> Replace power window main switch.

FRONT DOOR GLASS AND REGULATOR

PFP:80300

Removal and Installation

AIS005RC

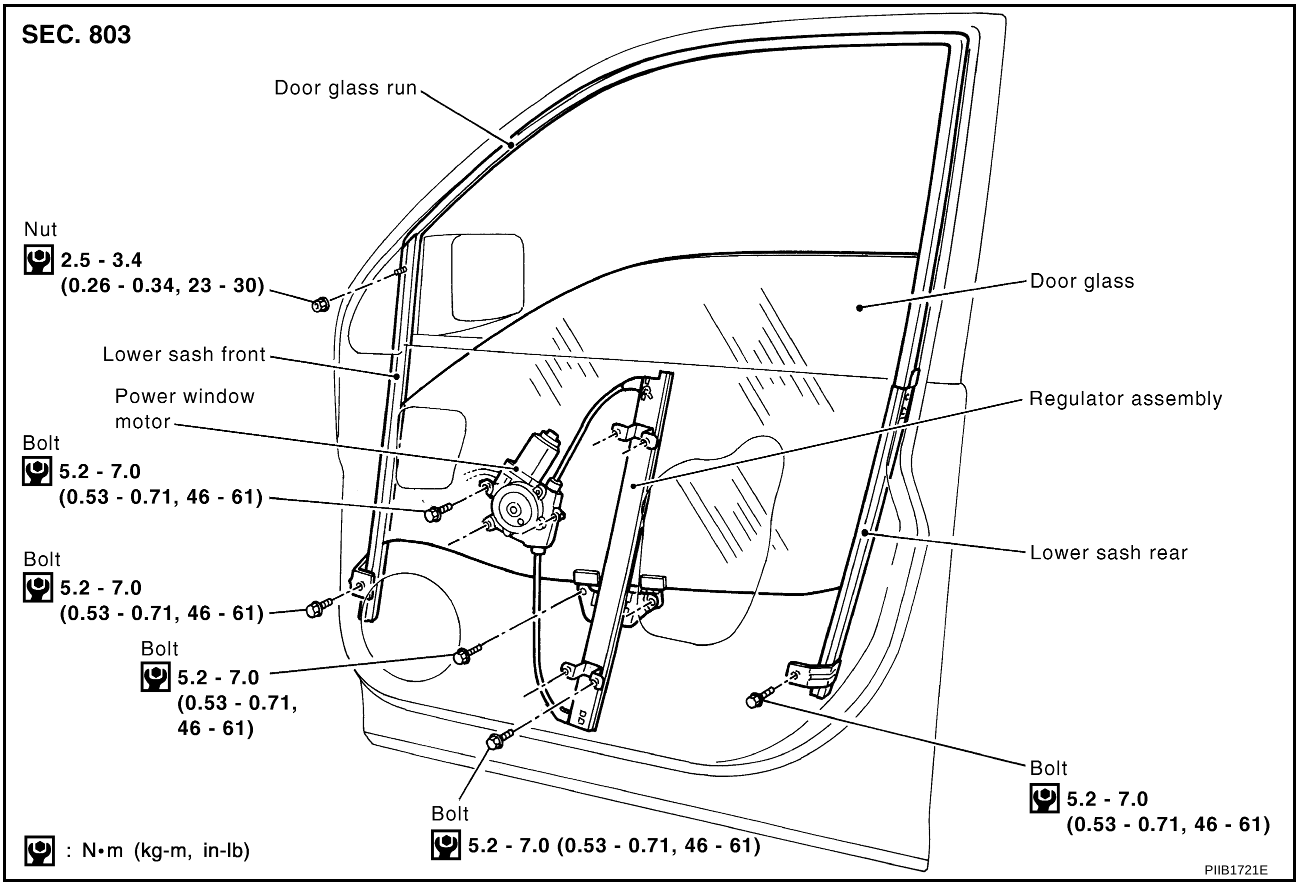

FRONT DOOR GLASS

Removal

1. Remove front door finisher. Refer to EI-32, "Removal and Installation" .
2. Remove sealing screen.

   NOTE:
   If sealing screen is reused, cut the butyl-tape so that a part of butyl-tape remains on the sealing screen.
3. Operate power window main switch to raise or lower the door window until the carrier plate mounting bolts appear.
4. Remove carrier plate mounting bolts.

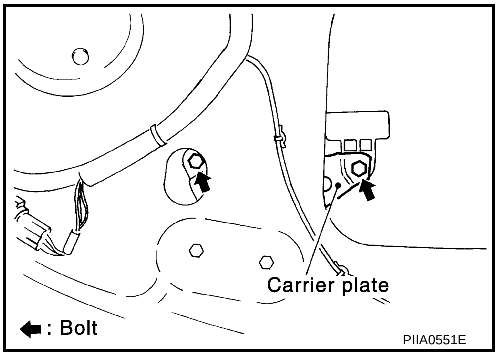

5. While holding door glass, raise it at the rear end to pull glass out of the sash toward the outside of door.

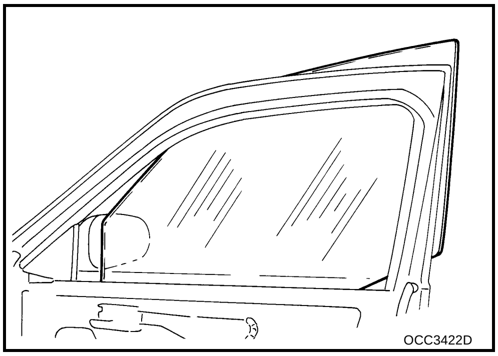

Installation

Install in the reverse order of removal.

FRONT DOOR REGULATOR ASSEMBLY

Removal

1. Remove front door finisher. Refer to EI-32, "DOOR FINISHER" .
2. Remove sealing screen.

   NOTE:
   If sealing screen is reused, cut the butyl-tape so that a part of butyl-tape remains on the sealing screen.
3. Operate power window main switch to raise or lower the door window until the carrier plate mounting bolts appear.
4. Remove carrier plate mounting bolts.

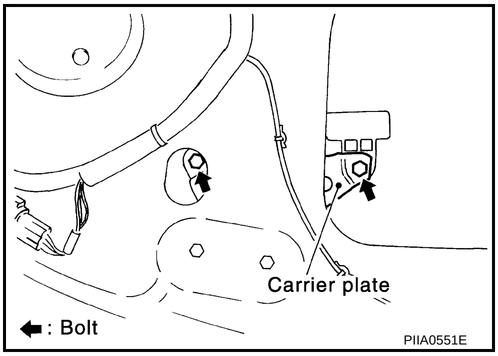

5. Raise up the door glass and hold with the suction lifter.

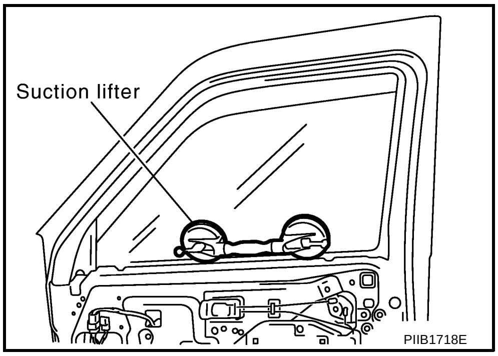

6. Disconnect power window motor harness connector.
7. Remove regulator assembly and guide rail mounting bolts, and remove regulator assembly through the access hole.

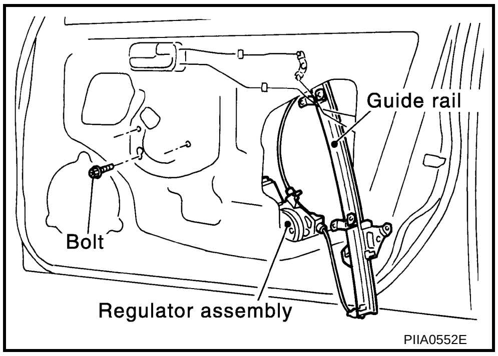

Installation

Install in the reverse order of removal.

Inspection after Removal

Check regulator assembly for the following. If a malfunction is detected, replace or grease it.

- Wire wear
- Regulator deformation
- Grease condition for each sliding part

The arrows in the figure show body grease application points of the multi-purpose grease.

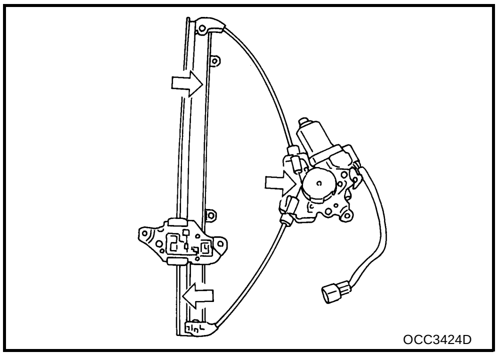

Disassembly

Remove power window motor from regulator assembly.

Assembly

Assemble in the reverse order of disassembly.

Inspection after Installation

SETTING OF LIMIT SWITCH (DRIVER SIDE)

If any of the following work has been done, set the limit switch (integrated in the motor).

- Removal and installation of regulator assembly
- Removal and installation of power window motor from the regulator assembly
- Operate regulator assembly as a unit
- Removal and installation of door glass
- Removal and installation of door glass run

RESET OPERATION

After installing each component to the vehicle, follow the steps below.

1. Raise door glass to the top position.
2. While pressing and holding reset switch, lower door glass to the bottom position.
3. Release reset switch, and check that reset switch returns to the original position. Then raise door glass to the top position.

CAUTION:

Do not operate door glass automatically to raise door glass to the top position.

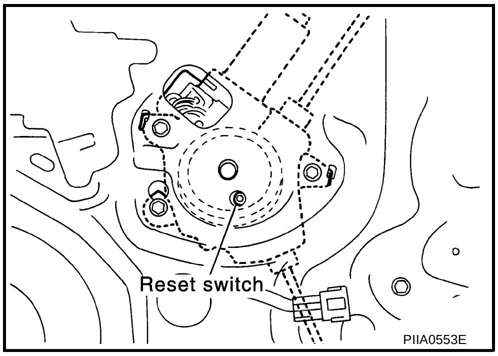

Fitting Inspection

AIS0065T

- Check that door glass is securely fit into door glass run groove.
- While raising and lowering the window, check for abnormal operation.
- Lower the door glass slightly [approx. 10 to 20 mm (0.39 to 0.79 in)], and check that the clearance to the sash is parallel. If the clearance between the door glass and sash is not parallel, loosen the regulator assembly mounting bolts, guide rail mounting bolts, and door glass & carrier plate mounting bolts to correct the door glass position.

REAR DOOR GLASS AND REGULATOR

PFP:82300

Removal and Installation

AIS005RD

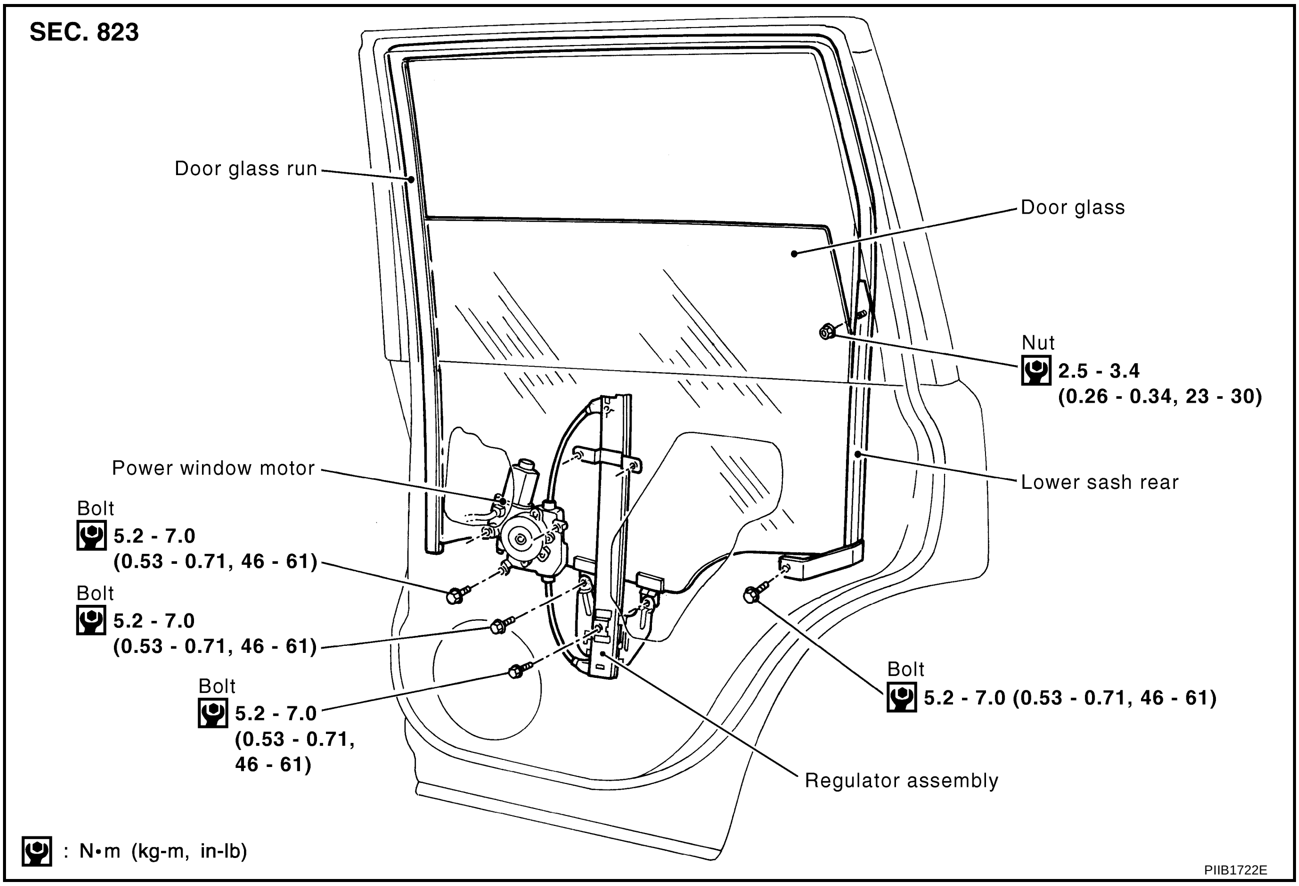

PIIB1722E

REAR DOOR GLASS

Removal

1. Remove rear door finisher. Refer to EI-32, "Removal and Installation" .
2. Using a slotted screwdriver or similar tool, remove clip on the corner inner cover. Slide the corner inner cover upward to disconnect the upper hook, and remove the cover.

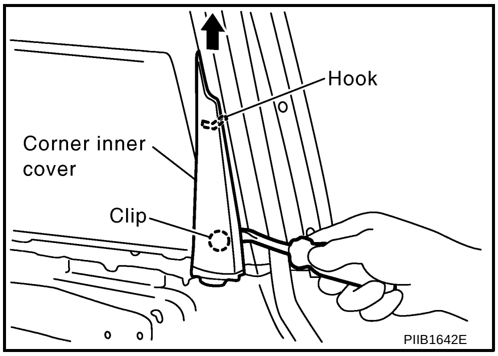

PIIB1642E

3. Slide the door sash cover forward to remove.

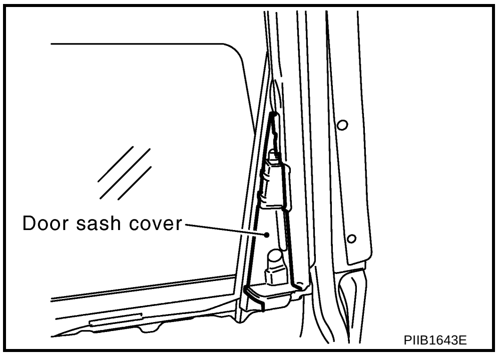

PIIB1643E

4. Remove corner outer cover mounting bolt. Disconnect upper hook, and remove the cover.

   : 3.0 N·m (0.31 kg-m, 27 in-lb)

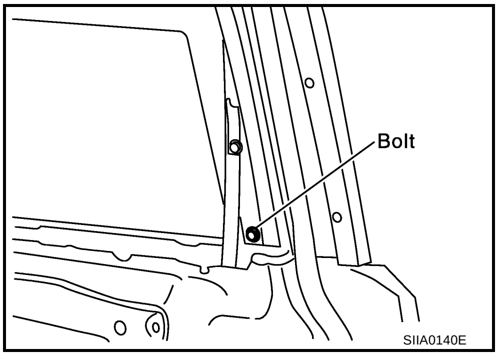

5. Remove door outside molding. Refer to EI-21, "Removal and Installation" .
6. Remove sealing screen.

   NOTE:
   If sealing screen is reused, cut the butyl-tape so that a part of butyl-tape remains on the sealing screen.
7. Operating power window switch, raise or lower the door window until the carrier plate mounting bolts appear.
8. Remove carrier plate mounting bolts.

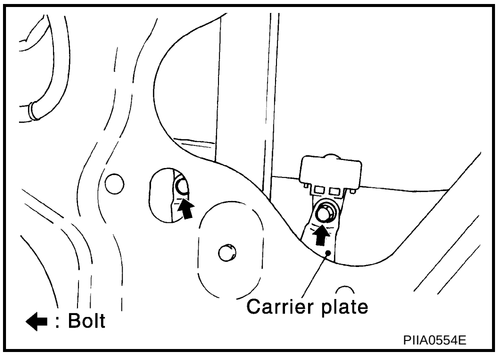

9. Remove mounting nut on upper portion of lower sash rear.

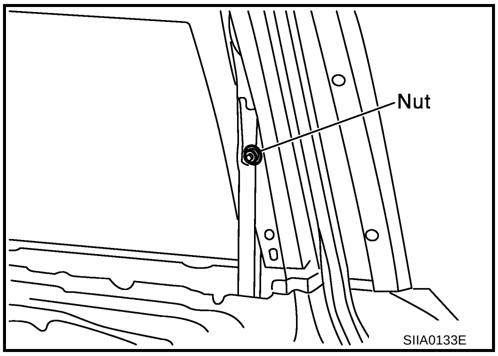

10. Remove mounting bolt from lower portion of lower sash rear.
11. Rotate lower sash rear, and remove door glass from door glass run.
12. Pull out the door glass toward the outside of the door to remove.
13. Remove door glass run from lower sash rear.
14. Remove lower sash rear.

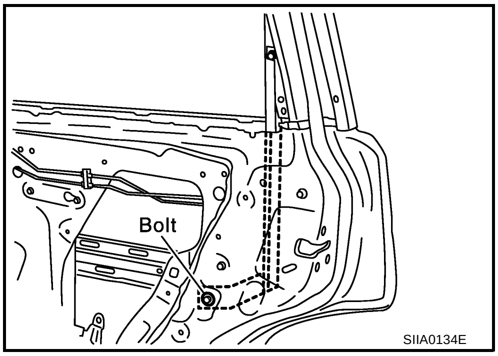

Installation

Install in the reverse order of removal.

REAR DOOR REGULATOR ASSEMBLY

Removal

1. Remove rear door finisher. Refer to EI-32, "DOOR FINISHER" .
2. Remove sealing screen.

   NOTE:
   If sealing screen is reused, cut the butyl-tape so that a part of butyl-tape remains on the sealing screen.
3. Operating power window switch, raise or lower the door glass until the carrier plate mounting bolts appear.
4. Remove carrier plate mounting bolts.

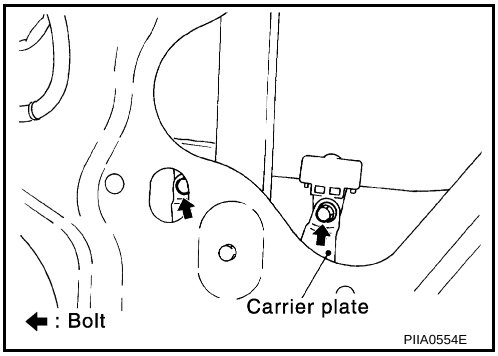

5. Raise up the door glass and hold with the suction lifter.
6. Disconnect power window motor harness connector.
7. Remove mounting bolts, and then remove regulator assembly through the access hole.

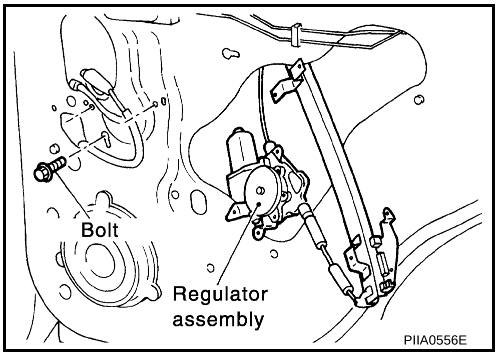

Installation

Install in the reverse order of removal.

Inspection After Removal

Check regulator assembly for the following. If a malfunction is detected, replace or grease it.

- Wire wear
- Regulator deformation
- Grease condition for each sliding part

The arrows in the figure show application points of the multi-purpose grease.

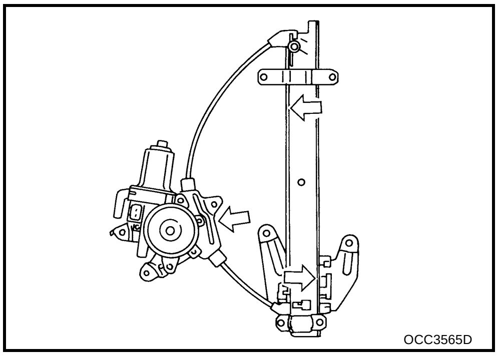

Disassembly

Remove power window motor from regulator assembly.

Assembly

Assemble in the reverse order of disassembly.

Fitting Inspection

AIS0065U

- Check that door glass is securely fit into door glass run groove.
- While raising and lowering the door glass, check for abnormal operation.

- Lower the door glass slightly [approx. 10 to 20 mm (0.39 to 0.79 in)], and check that the clearance to the sash is parallel. If the clearance between the door glass and sash is not parallel, loosen the regulator assembly mounting bolts and glass & carrier plate mounting bolts to correct the glass position.

DOOR MIRROR

PFP:96301

Wiring Diagram — MIRROR —

AIS005RF

GW-MIRROR-01

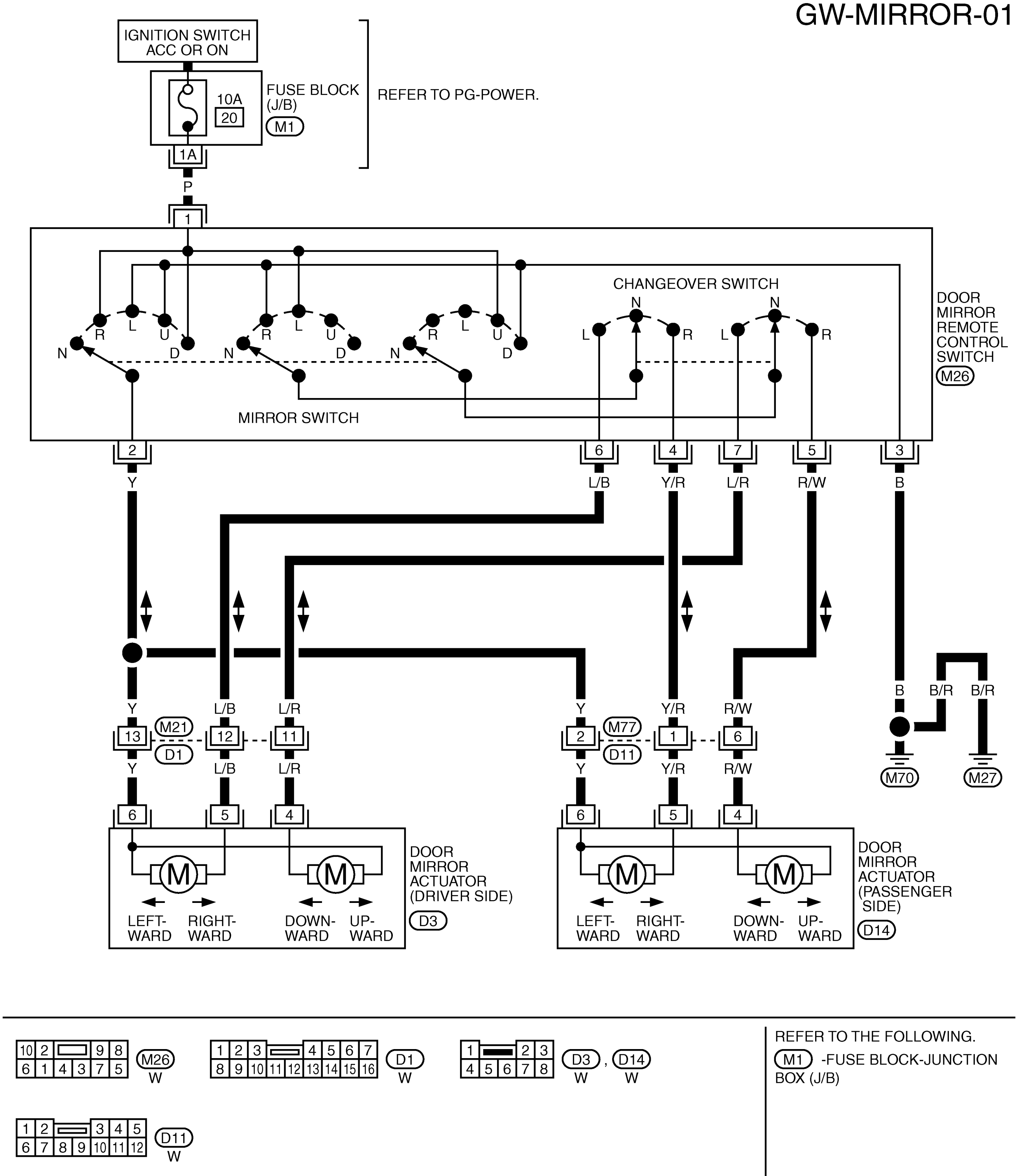

REFER TO THE FOLLOWING.

M1 -FUSE BLOCK-JUNCTION BOX (J/B)

TIWB0065E

Removal and Installation

AIS005RH

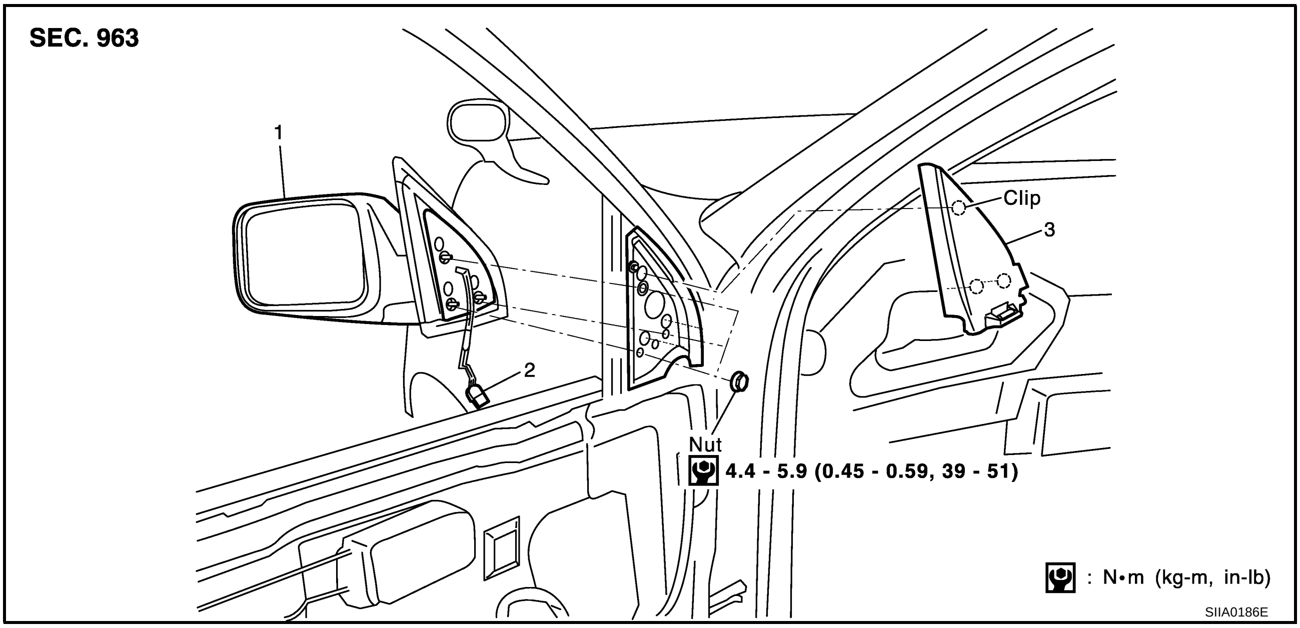

1. Door mirror
2. Connector
3. Corner cover

REMOVAL

1. Remove front door finisher. Refer to EI-32, "Removal and Installation" .
2. Remove corner cover.
3. Disconnect door mirror harness connector.
4. Remove door mirror mounting nuts, and remove door mirror assembly.

INSTALLATION

Install in the reverse order of removal.

Disassembly and Assembly

AIS005RI

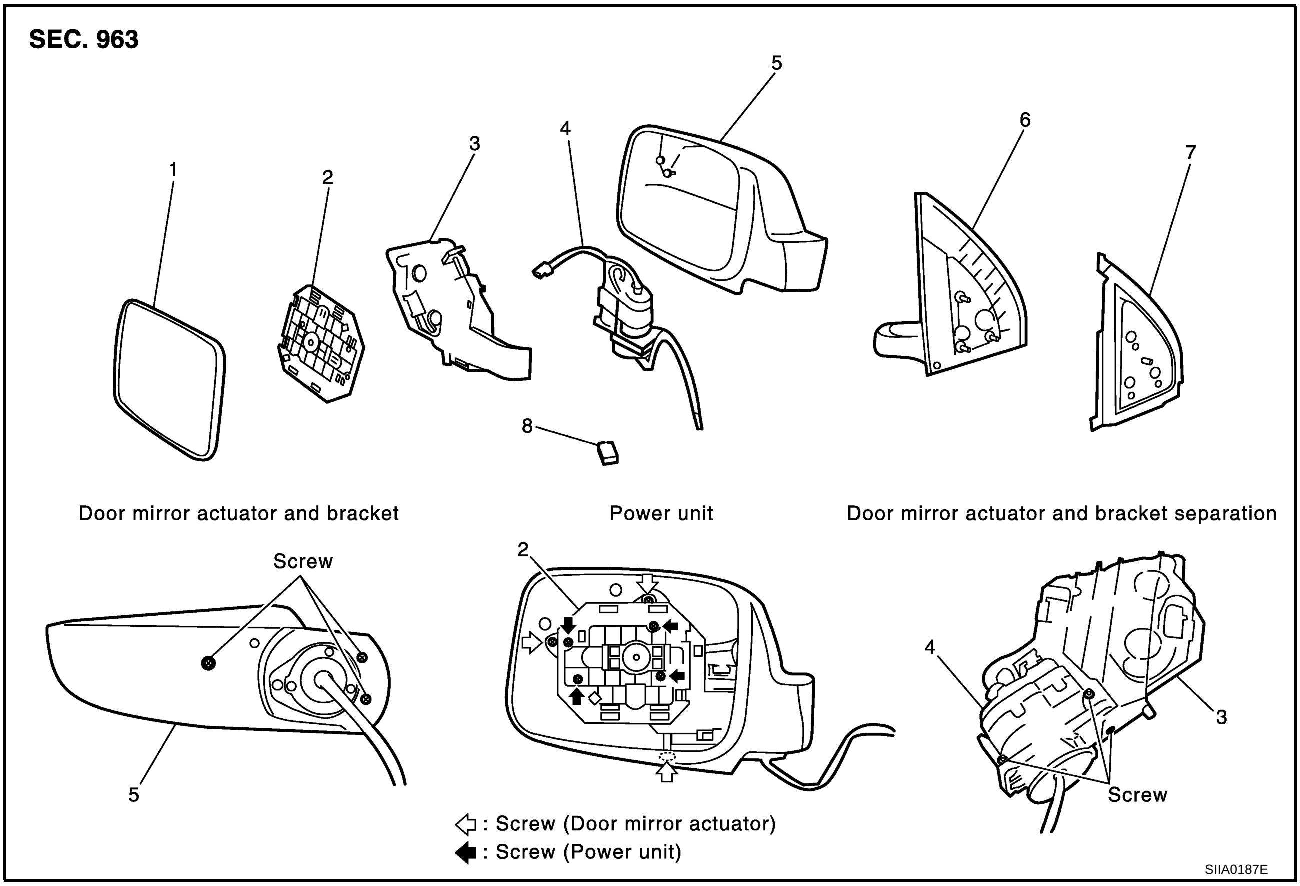

1. Mirror body	2. Power unit	3. Bracket
4. Door mirror actuator	5. Housing	6. Base
7. Packing	8. Connector	

DISASSEMBLY

1. Pull out all the terminals from the connector.

   NOTE:
   Before pulling out the terminal, note the connector terminal arrangement.
2. Turn the mirror glass surface upward.
3. Apply a protective tape to the housing.
4. Insert a narrow slotted screwdriver wrapped with tape in the concave gap between mirror glass and power unit to push up tabs (2 locations) on mirror holder to disengage lower part of mirror holder, and remove mirror body assembly.

   NOTE:
   When pushing up the tabs, do not forcefully push up only 1 concave but try to push up using 2 concave positions.
5. Remove packing.
6. Remove base.
7. Remove door mirror actuator and bracket from housing.
8. Remove power unit from bracket, and disconnect connector.
9. Separate the door mirror actuator from the bracket.

ASSEMBLY

1. Install door mirror actuator to the bracket.
2. Connect power unit connector. Install power unit to the door mirror actuator (bracket).
3. Install door mirror actuator (bracket) and base to the housing.
4. Set power unit and mirror body assembly in a horizontal position.
5. Engage upper tabs of mirror glass with power unit. Then, press lower part of mirror glass down until the lower part snaps to allow engagement of lower tabs.

   NOTE:
   After installation, visually check that the lower tabs are securely engaged when viewed from the bottom of mirror surface.
6. Install the packing to the base.
7. Insert the harness terminal into the connector.

   NOTE:
   Make sure to insert the harness terminal into the correct connector. Do not confuse the locations.

INSIDE MIRROR

PFP:96321

Removal and Installation

AIS005RJ

REMOVAL

1. Remove inside mirror cover. Refer to EI-40, "HEADLINING" .
2. Remove the screws securing inside mirror assembly and mirror base as shown in the figure.

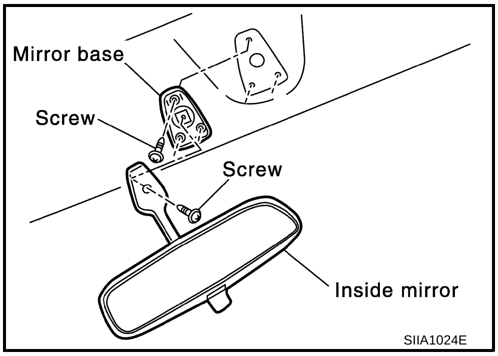

INSTALLATION

Install in the reverse order of removal.